CEDAR Special

1321 Needle Feed

1341/1341V
1341-7D

CYLINDER BED COMPOUND FEED (AUTO-TRIMMING) LOCKSTITCH SEWING MACHINE

OPERATION INSTRUCTION / PARTS MANUAL

www.collierequipment.com

CONTENTS

Operation Instruction

1.Brief introduction....1
2.Main specifications....1
3.Machine installation....1
4.Installing the knee lifter....1
5.Setting the waste oil collector....2
6.Tension of belt....2
7.Installing the belt cover....2
8.Lubrication....3
9.Setting the needle....4
10.Threading the bobbin thread....4
11.Installing the thread tension for bobbin thread winder....4
12.Winding bobbin thread....5
13.Threading the needle thread....5
14.Stitch length....5
15.Thread tension....6
16.Adjusting thread take-up spring....6
17.Presser foot lift....6
18.Pressure of presser foot....7
19.Adjusting needle guard plate....7
20.Reset of safety clutch....7
21.Adjusting hook thread opener....8
22.Timing between needle and rotating hook....8
23.Alternating lift amount of presser feet....9
24.Adjusting the cutter....9
25.Stop position....9
26.Settings for different speeds....10
27.Troubleshooting....10

Parts Manual

1.Casting mechanism....11-14
2.Arm shaft & thread take-up mechanism....15-16
3.Needle bar rocking frame mechanism....17-18
4.Upper feed mechanism....19-22
5.Lower feed and reverse regulating....23-26
6.Lower shaft....27-30
7.Thread trimming mechanism....31-32
8.Auto-reverse feed mechanism....33-34
9.Tension release mechanism....35
10.Auto-lifter mechanism....36
11.Lubrication components....37-38
12.Thread tension components....39
13.Bobbin winder & tension components....40
14.Knee lifter components....41-42
15.Accessories....43-44
16.Binding parts....45

www.collierequipment.com

OPERATION INSTRUCTION

www.collierequipment.com

1. Brief introduction

This compound feed sewing machine is designed with unique feed mechanisms, which make sewing of uneven and thick materials easily. Smooth, uniform and neat stitches are promised. The machine runs with high speed and low noise thanks for its' vertical-axis rotating hook, sliding lever take-up and synchronized belt driven mechanisms. It is designed for sewing of shoes, caps, sofa and bag, etc, and specially for sewing cylindrical or arc products.

2. Main specifications

Model	GC2263-D2T3	GC2263	GC2263V
Applications	Medium & heavy weight materials		
Max sewing speed	2500s.p.m		2000s p.m
Max stitch length	6mm		
Needle bar stroke	36mm		
Needle	DP×17(Nm125~Nm180) 23#		
Lubrication	Oil wick		
Rotating hook	Vertical hook		
Presser foot lift height	9mm by hand, 16mm by knee/lifter		
Motor power	Servo motor	370W clutch motor	

3. Machine installation (Fig.1)

Fix the base with screw ① washer ② and nut ③ on the four holes of table, then fix the machine head on the base.

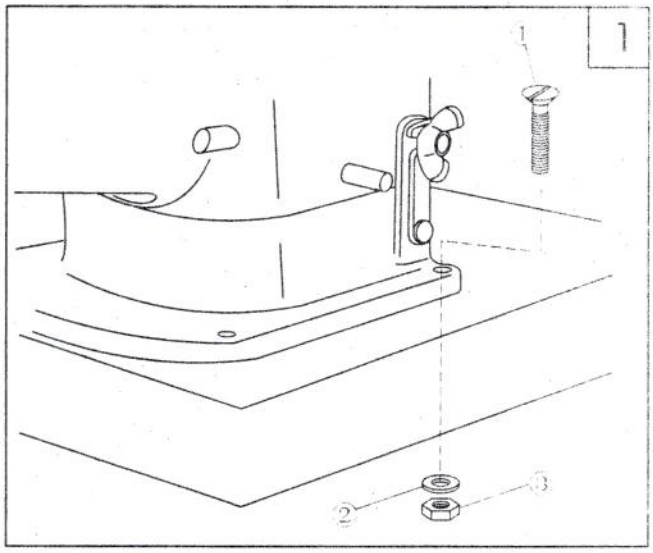

4. Installing the knee lifter (Fig.2)

1.Fix the bar ⑤ and pad ⑥ in the connector ④;
2.Adjust the direction of pad with screws ⑦ ⑧ ⑨;
3.Fix the connector ④ on the shaft ⑩.

Note: if need to put the machine backward, please first to loosen the screw ⑦ to uninstall the knee lifter

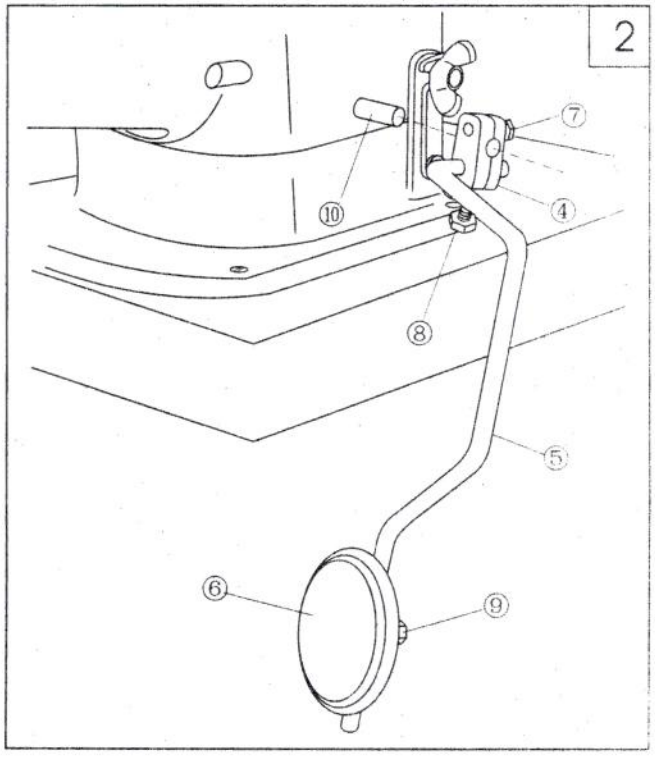

www.collierequipment.com

3

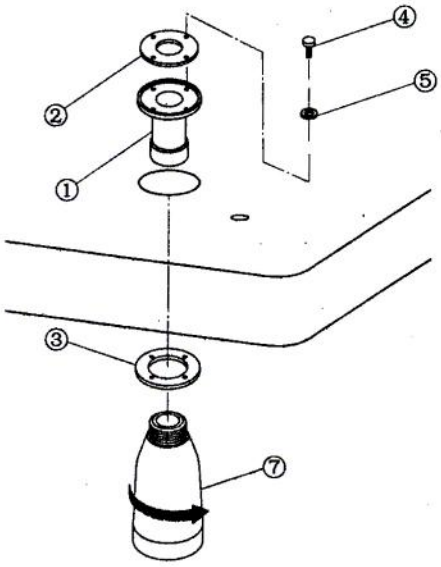

5. Setting the waste oil collector (Fig.3)

1.Install oil bolt ①, oil seal ② and washer ③ on the table, then fix them.
2.Screw oil pot ⑦ up to the oil bolt ①.

4

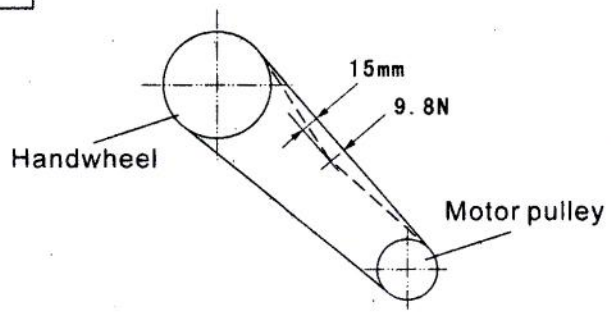

6. Tension of belt (Fig.4)

Adjust the height of motor to regulate the tension of belt. Press the center of belt with a force of 9.8N. displacement should be 15mm, that means tension is proper.
Note: Turn off the power and make sure the motor stopped before adjustment.

5

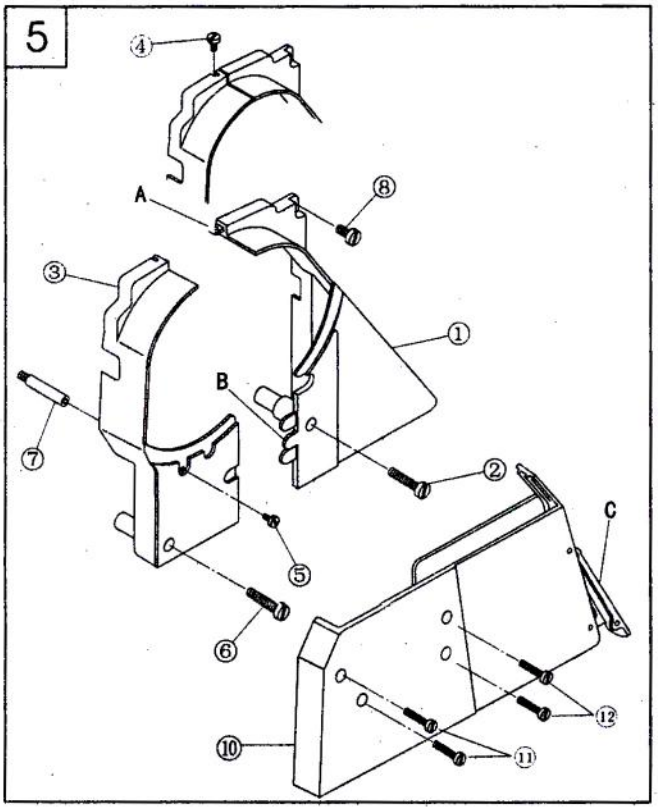

7. Installing the belt cover (Fig.5)

1.Screw the belt cover supporting pole into the screw hole.
2.Install belt cover (R) ① to the machine head by setscrew ② and ⑧.
3.Set belt cover (L) ③ to the pawl A and B of cover ①.
4.Fix belt cover (L) ③ by set screw ④, ⑤ and ·
5.Fix the lower belt cover ⑩ by set screw ·· and ·

Note: After installation, make sure the belt cover is not touched with the belt and handwheel.

www.colliequipment.com

8. Lubrication (Fig.6)

1. Drip oils to the signed position by arrows everyday.
2. Oil the machine before its Initial running or after a long time idle at signed point and, remove top cover A, drip oils to all felts and wicks inside the arm.
3. The hole in read color should be oiled.

6

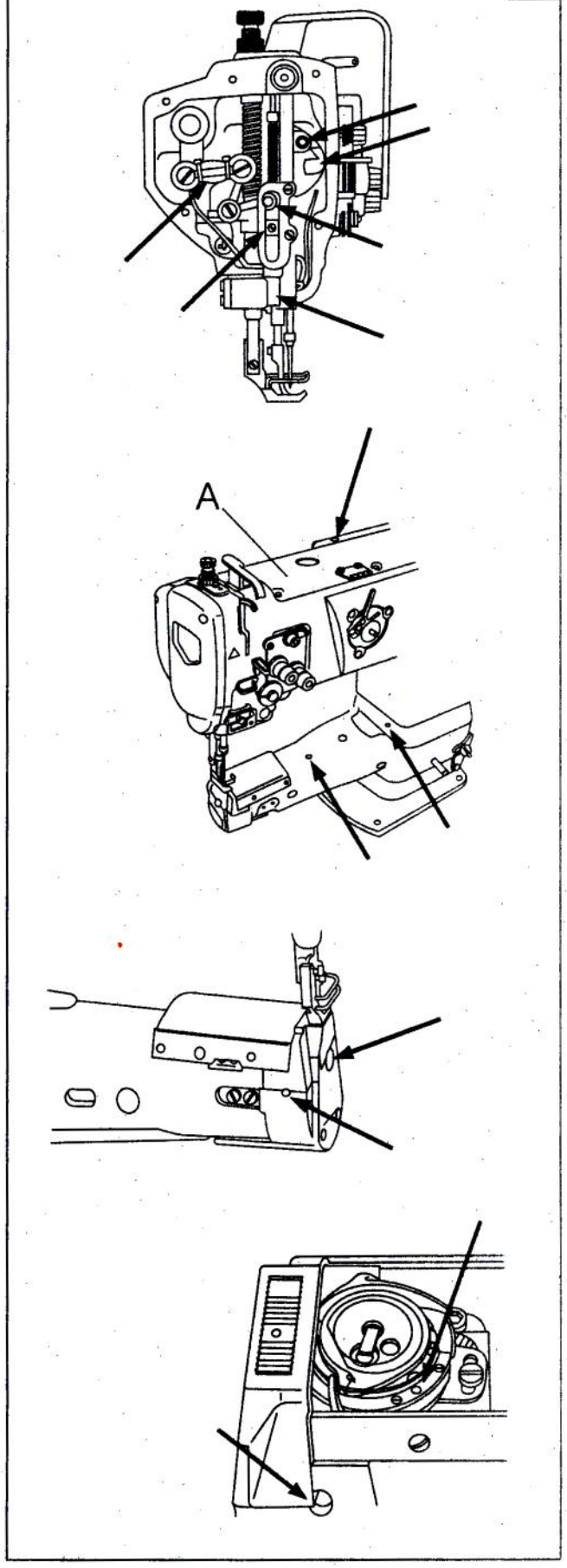

www.colliequipment.com

7

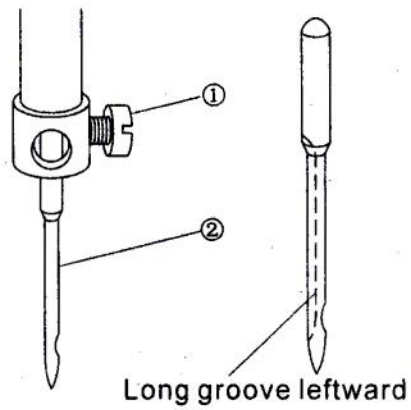

9. Setting the needle (Fig.7)

1.Turn the handwheel to raise the needle bar to its highest point.
2.Loosen needle set screw ② and have the long groove of the needle ① face leftward.
3.Insert needle fully.
4.Tighten the set screw ②.

8

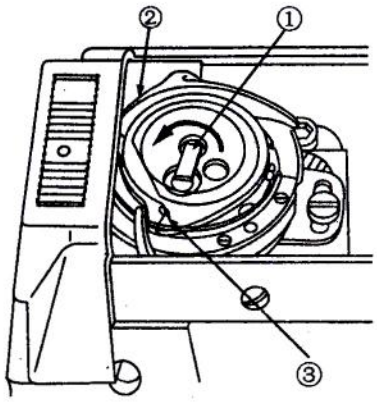

10. Threading the bobbin (Fig.8)

1.Lift the latch ① and take out the bobbin.
2.Insert bobbin correctly and close the latch.
3.Draw bobbin thread through slot ②, tension spring and hole ③.
4.Bobbin should turn in the direction shown by the arrow when draw the bobbin thread.

9

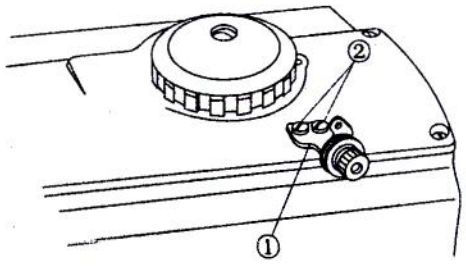

11. Installing the thread tension for bobbin thread winder(Fig.9)

Mount thread tension ① onto the top cover with set screw ②.

www.collierequipment.com

12. Winding bobbin thread (Fig.10)

1.Thread in sequence ① ~ ④, then wind thread around the bobbin several circles
2.Press latch A.
3.Loosen screw B to adjust the latch to get the proper thread amount of 80% of the bobbin capacity.
4.If thread wound unevenly, move guide C to regulate and fasten with screw D.
5.If the proper thread amount acquired, the latch will disengage automatically.

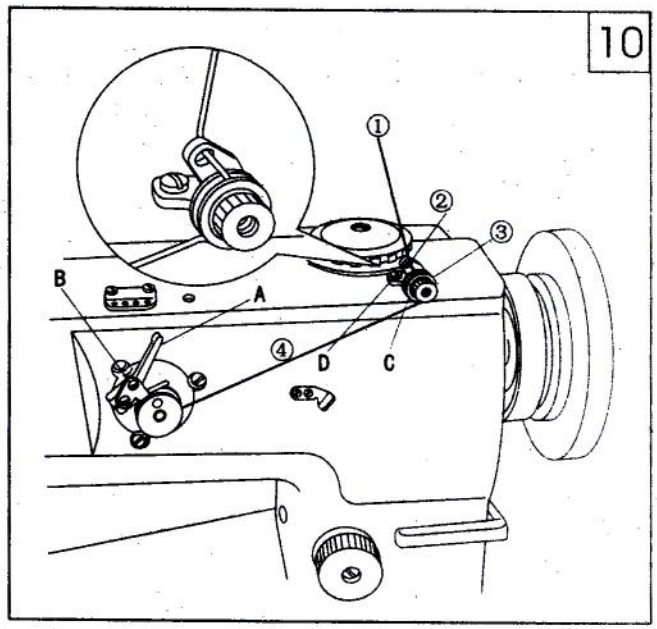

13. Threading the needle thread(Fig.11)

Thread in sequence as shown in the illustration.

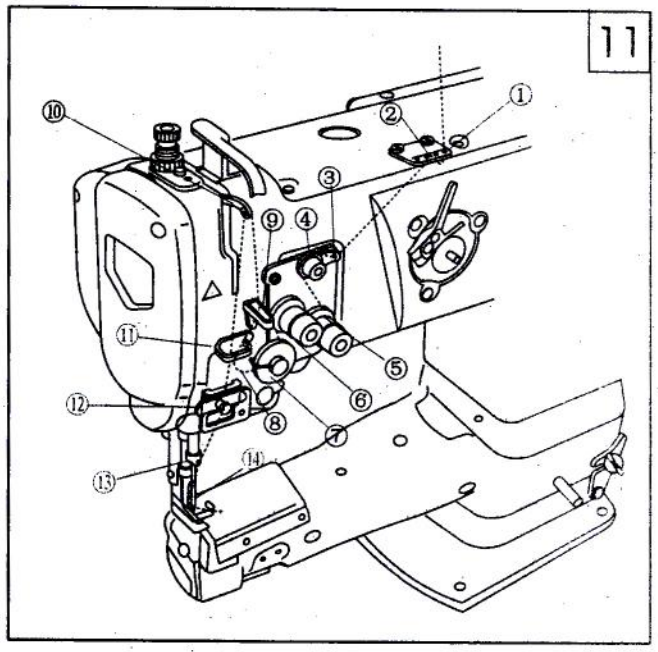

14. Stitch length (Fig.12)

Turn the stitch dial ① leftward or rightward to get your required stitch length.
Press the reverse lever ② to start reverse sewing, loose it to restore normal sewing.

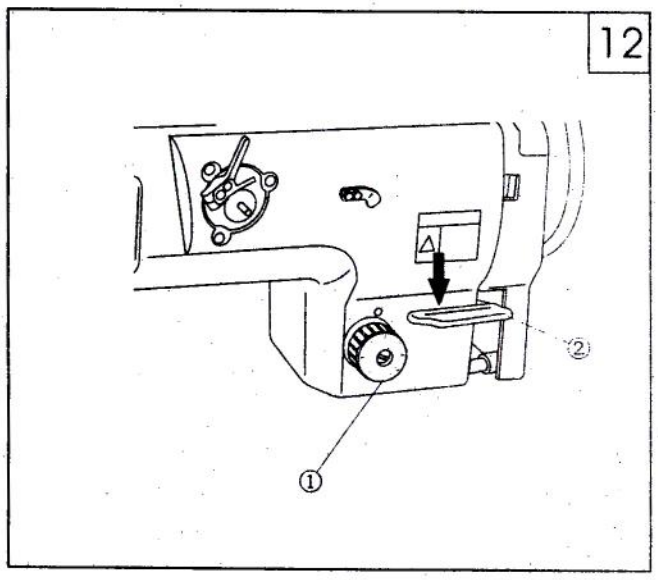

www.collierequipment.com

13

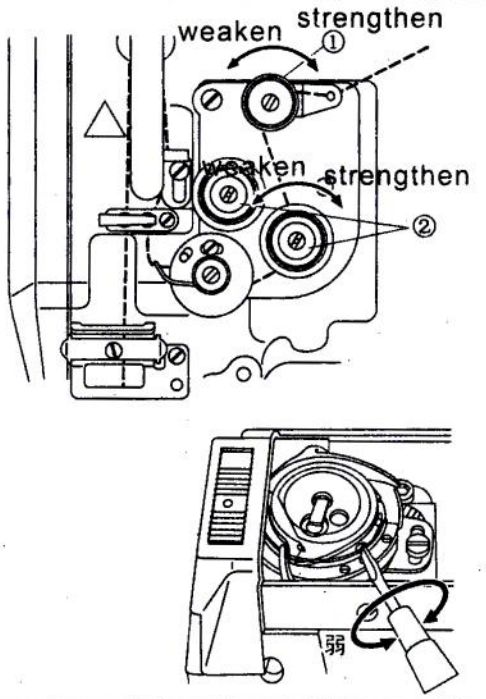

15. Thread tension (Fig.13)

1.Tension of needle thread
Turn the tension nut ① clockwise to short the thread remains after cut, turn counterclockwise to lengthen the thread remains.
Turn the tension nut ② clockwise to increase needle thread tension, turn counterclockwise to reduce the tension.

2.Tension of bobbin thread
Turn the tension nut ③ clockwise to increase bobbin thread tension, turn counterclockwise to reduce the tension.

14

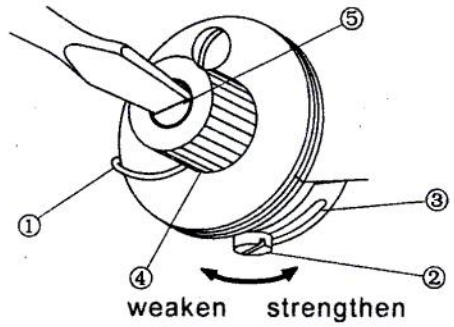

16. Adjusting thread take-up spring (Fig.14)

1.To change the take-up spring swing range
a.Loosen set screw 2 and move plate 3 to adjust the take-up spring.
b.Move plate ③ rightward to increase take-up spring swing range, move leftward to reduce swing range.

2.To change the tension of take-up spring
Loosen nut ④, turn shaft ⑤ counterclockwise to increase tension, turn clockwise to reduce the tension.

15

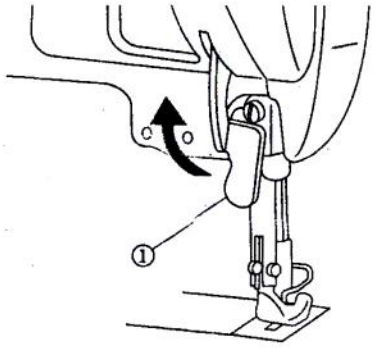

17. Presser foot lift (Fig.15)

1.When the presser foot on the lower resting position, raise the foot lift lever 1 as illustration. The presser foot rises 9mm then stop.
2.Lower the lift lever 1 to restore the presser foot.

www.collierequipment.com

18. Pressure of presser foot (Fig.16)

Turn the regulating bolt ① rightward to increase the pressure, turn counterclockwise to reduce the pressure. Tighten nut ② after adjustment.

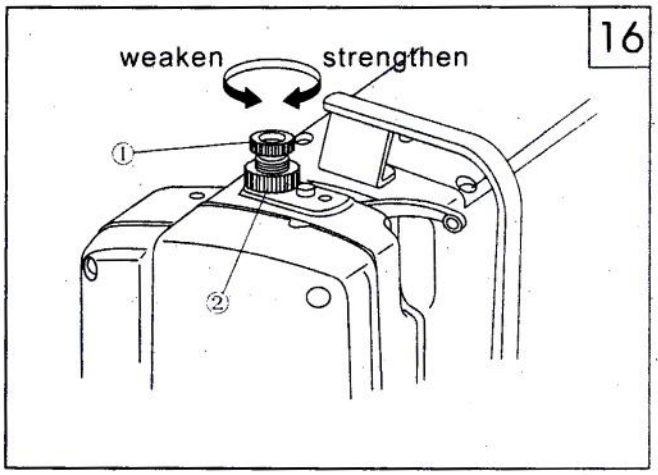

19. Adjusting needle guard plate (Fig.17)

Check the position of needle guard plate after change the rotating hook. The standard position of the guard plate ② is 0.1~0.2mm against needle ①. If the clearance is not right, bend the guard plate to adjust.
1.To bend the guard plate inward, insert a screwdriver outside.
2.To bend the guard plate outward, insert a screwdriver inside of the plate.

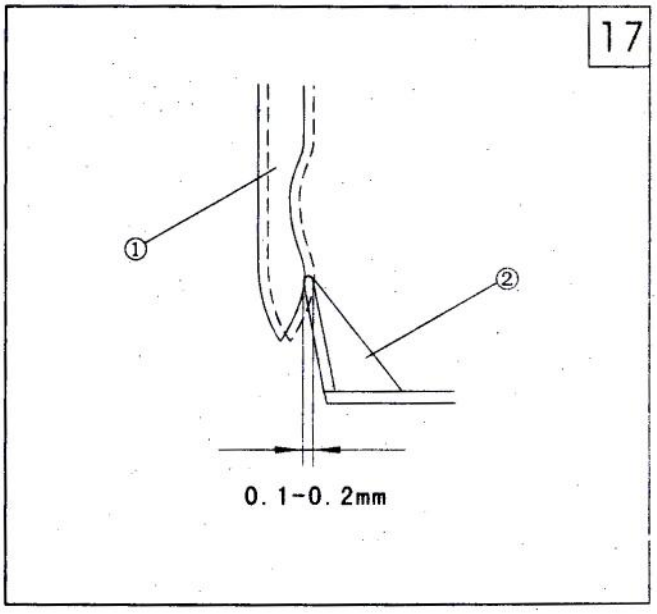

20. Reset of safety clutch (Fig.18)

In case the rotating hook is applied with a over strong force during operation, the safety clutch start working. The rotating hook stop turn even the handwheel is still turning.
1.Reset the safety clutch.
a.Clean the locked thread in the hook
b.Press button ① down on the bed, Firmly turn the handwheel reversely at the same time.
C.When a "click" sound is heard, the safety clutch is reset successfully.

2.Adjust the force
Turn the screw ② to Direction A to increase the force of clutch and turn the screw to Direction B to decrease the force.

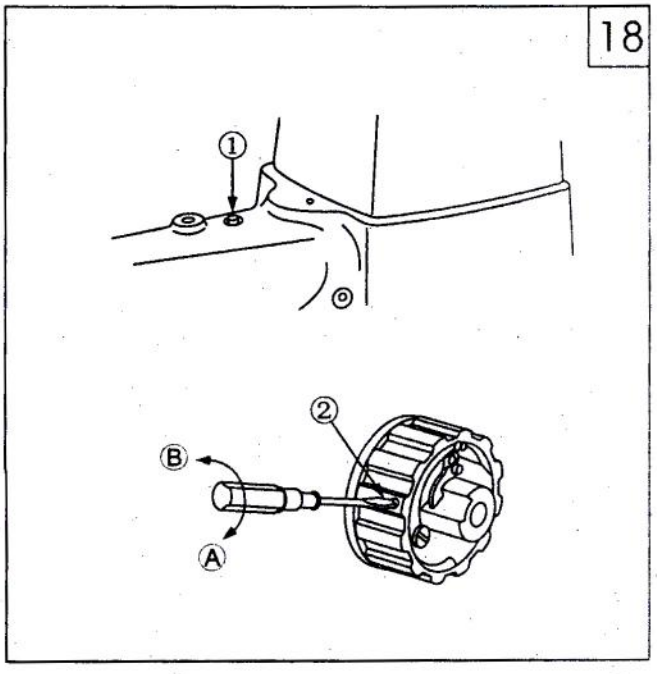

www.collierequipment.com

19

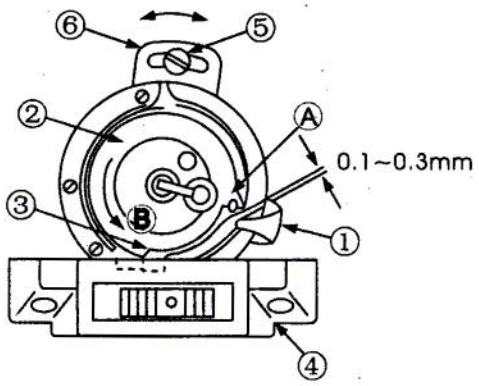

21. Adjusting hook thread opener (Fig.19)

1.Turn the handwheel in normal direction to move the thread opener ① to its ultimate position.
2.Turn the bobbin cap ② in direction B showed by arrow, to make stopper ③ (the projection part) against the notch under the bottom of the needle plate ④.
3.Loosen the screw ⑤ and move the plate ⑥. adjust the clearance between horn A and the opener to 0.1~0.3mm, tighten the set screw ⑤.

20

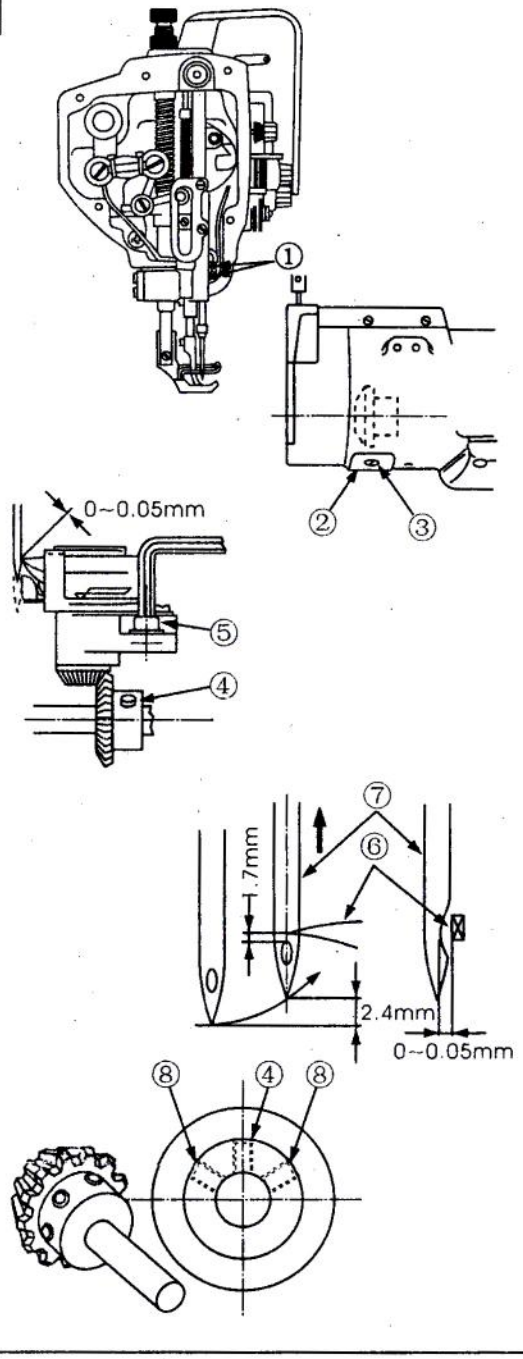

22. Timing between needle and rotating hook (Fig.20)

1.Turn the stitch dial to 0.
2.Turn the handwheel to lower the needle bar to its lowest position and loosen the screw ①
3.The standard height of needle bar: when needle bar is lifted by 2.4mm from its lowest point, the clearance between top of the needle hole and hook tip is 1.7mm.
4.Loosen the screw ③ and move the cover ②. loosen the screw ④ and ⑧
5.Loosen the set screw ⑤, and move the hook saddle leftward or rightward to make the clearance between hook tip and needle ⑦ to 0~0.05mm. Tighten screw ⑥.
6.Make the hook tip align with the center of the needle bar. Tighten set screws ④
7.Turn the handwheel clockwise and tighten the screw ⑧

www.collierequipment.com

23. Alternating lift amount of presser feet (Fig.21)

To adjust the lift amount of presser feet by moving upper feed crank ① up or down within the range of the long slot. Move the crank up to increase alternating lift amount, move down to reduce. Tighten nut ③ after adjusting.
In case the lift amount of the two presser feet is different, move the two feet to align with the needle plate surface, loosen crank set screw ②. Turn the handwheel in normal direction, the lift amount of outer foot is much than that of inner foot. Turn the handwheel reverse, the lift amount of outer foot is less than that of inner foot. Tighten screw ② after adjustment.
Remove the right side of the window plate, the upper feed crank ① can be observed.

Presser feet alternating lift amount	
Mark A	5mm
Mark B	4mm
Mark C	3mm

21

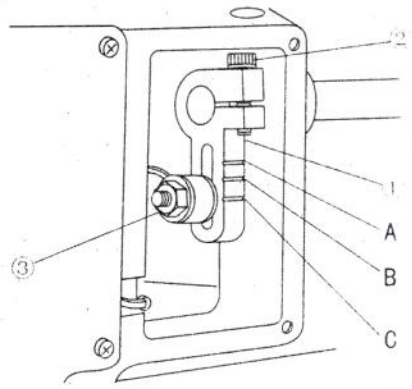

24. Adjusting the cutter (Fig.22)

1.Move the movable knife ① to upmost position,
2.Loosen the screw ② to move the fixed knife ③ leftward or rightward to adjust.
3.When the distance between the front tip of move knife and movable knife is 5-6mm, the knife pressure will be impressed.
4.After the movable knife is back, there should be a movement of 0.5-1mm at its contrail.

22

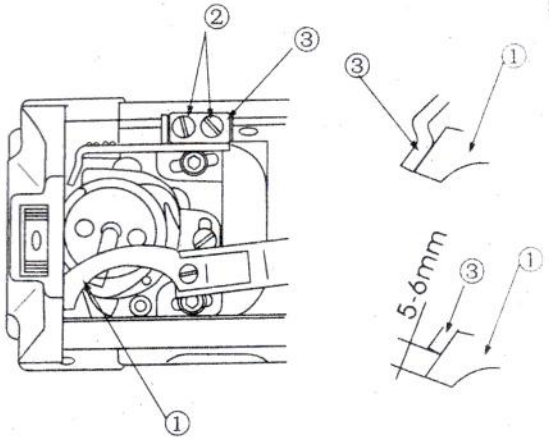

25. Stop position (Fig.23)

1.Align the mark ① on the casting with the mark ② on the handwheel, the meaning of every stop position, please refer to below table.
2.To adjust the needle up position by screw ③, to adjust the needle down position by screw ④

Mark on the handwheel	
White-white	Needle up
Yellow	Needle down
Red	For adjusting the cutting driven cam
No color	For lifting needle by reverse turn

23

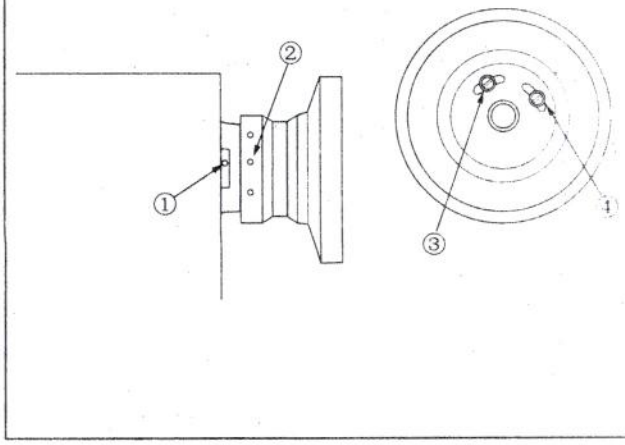

www.collierequipment.com

26. Settings for different speeds

Alternating lift amount	Stitch length< 6mm	6mm< Stitch length<9mm
Less than 2.5mm	2,500rpm	1,800rpm
2.5~4mm	2,200rpm	1,800rpm
4~4.75mm	1,800rpm	1,800rpm
4.75~6.5mm	1,600rpm	1,600rpm

Make proper settings for different speeds accordingly. Do not surpass the standard.

27. Troubleshooting

Trouble	Possible cause	Solution
1.Thread breaking (2~3mm thread left on the cloth)	1. Damage on the rotating hook slots, needle point, hook tip and needle plate 2. Needle thread too tight 3. Collision between needle and rotating hook 4. Rotating hook oiled insufficiently 5. Needle thread too loose 6. Thread take-up spring too rigid 7. Too fast or slow timing of rotating hook and needle	1. Polish the damaged position. thorns with sand paper or rasp 2. Weaken the needle thread tension 3. Refer to 22. Timing between needle and rotating hook 4. Adjust oil amount (7. Lubrication) 5. Increase the needle thread tension 6. Reduce the rigidity of take-up spring 7. Refer to 22. Timing between needle and rotating hook
2. Skipped stitch	1. Too fast or slow timing of rotating hook and needle 2. Presser foot pressure too weak 3. Clearance between the top of needle hole and the rotating hook tip not proper 4. Wrong needle	1. Refer to 22. Timing between needle and rotating hook 2. Tighten the pressure adjusting bolt 3. Refer to 22. Timing between needle and rotating hook 4. Replace the needle with correct one
3. Loose stitch	1. Bobbin thread doesn't pass under the tension spring of the bobbin case 2. Roughness on the rotating hook 3. Bobbin stop rotating 4. Bobbin thread too loose 5. Bobbin thread too tight 6. Damage of the needle point	1. Refer to 10. Threading the bobbin 2. Polish with sand paper or rasp 3. Replace bobbin or rotating hook 4. Increase the bobbin thread tension 5. Reduce the bobbin thread tension 6. Replace the needle

www.collierequipment.com

PARTS CHART

www.collierequipment.com

1. Casting mechanism

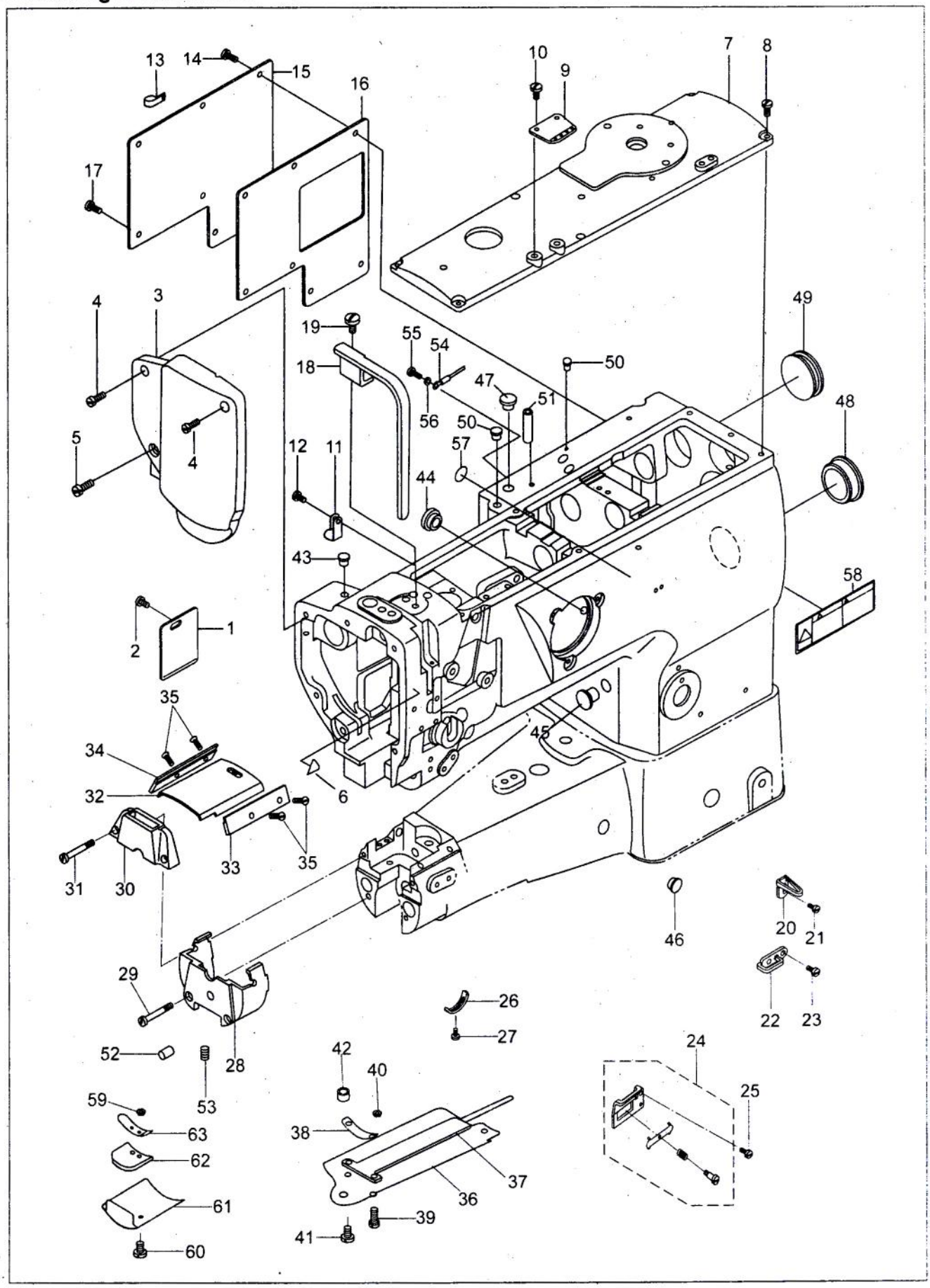

www.collierequipment.com

1. Casting mechanism

No.	Part Number	Name	Qt.			Remark
			2263	2263V	-D2T3	
1	92WF2-011	Cover	1	1	/	
2	1WF1-011	Screw	1	1	/	
3	92WF2-003	Face plate	1	1	1	
4	1WF5-039	Screw (1)	2	2	2	
5	37T2-210	Screw (2)	1	1	1	
6	6KT4-041	Caution label	1	1	1	
7	92WF2-009	Upper cover	1	1	1	
8	21WF4-047	Screw	6	6	6	
9	199WF2-017	Thread guide	1	1	1	
10	21WF1-062	Screw	2	2	2	
11	84WF1-021	Wire clamp	/	/	2	
12	1WF1-011	Screw	/	/	2	
13	84WF1-022	Wire clamp	/	/	3	
14	1WF5-039	Screw	/	/	3	
15	119WF2-003	Back cover	1	1	1	
16	119WF2-004	Packing	1	1	1	
17	1WF1-011	Screw	7	7	7	
18	92WF2-004	Thread take up lever cover	1	1	1	
19	13WF2-045	Screw	1	1	1	
20	92WF2-013	Thread guide	1	1	1	
21	36WF1-016	Screw	1	1	1	
22	92WF2-014	Thread guide	1	1	1	
23	1WF1-007	Screw	2	2	2	
24	92WF2-015	Lower thread assy.	1	1	1	
25	1WF1-007	Screw	1	1	1	
26	50WF2-022	Stopper	1	1	1	
27	1WF1-026	Screw	1	1	1	
28	248WF1-004	Needle plate base	1	1	1	
29	50WF2-024	Screw	1	1	1	
30	248WF1-003	Needle plate	1	1	1	
31	50WF2-028	Screw	2	2	2	
32	248WF1-006	Slide plate	1	1	1	
33	50WF2-030	Cover plate(front)	1	1	1	
34	248WF1-007	Cover plate(rear)	1	1	1	
35	50WF2-031	Screw	4	4	4	
36	248WF1-008	Bottom cover	1	1	1	
37	248WF1-009	Oil felt	1	1	1	
38	248WF1-010	Plate	1	1	1	
39		Screw	1	1	1	GB/T818 M3X6

www.collierequipment.com

1. Casting mechanism

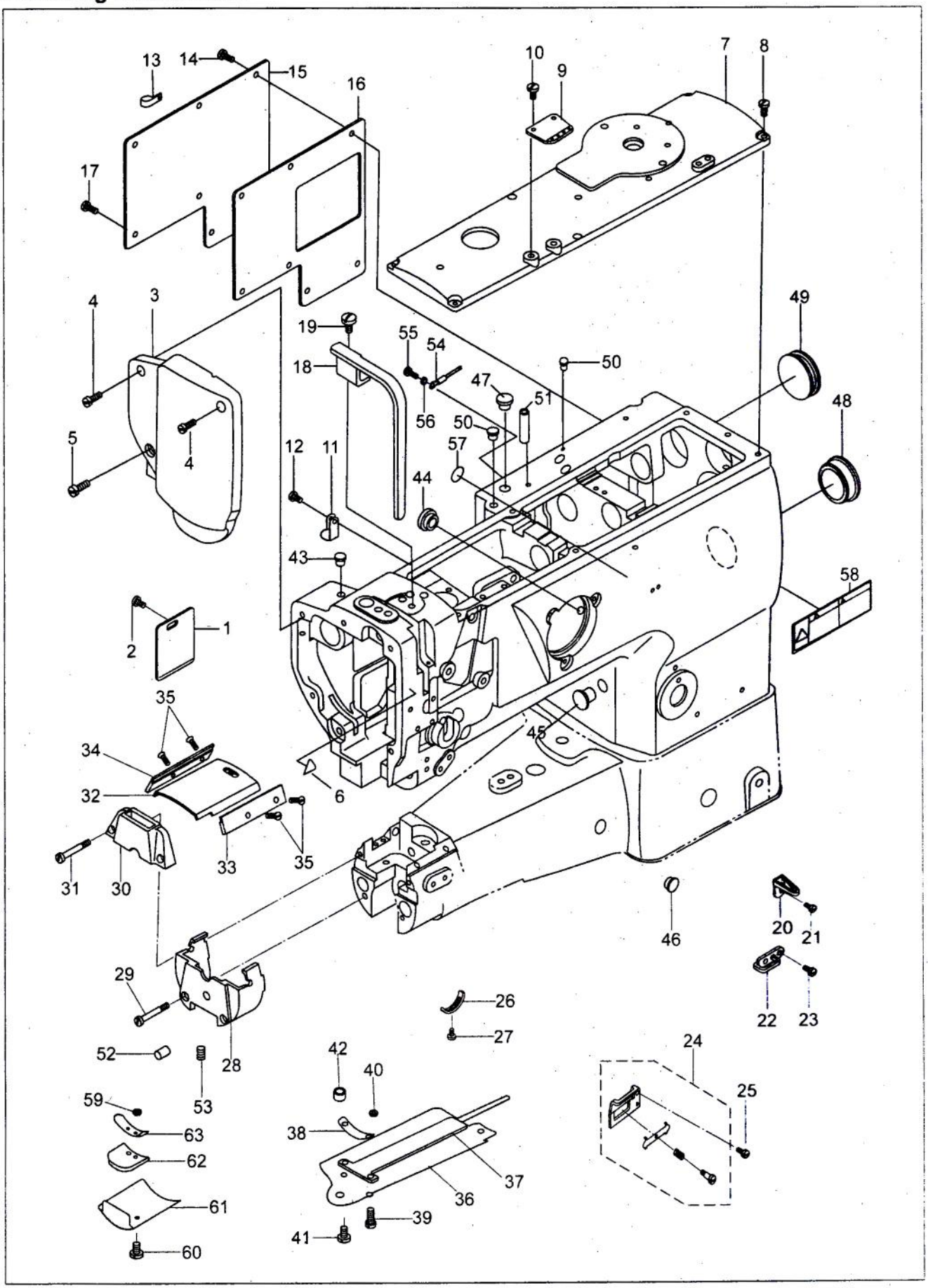

www.collierequipment.com

1. Casting mechanism

No.	Part Number	Name	Qt.			Remark
			2263	2263V	-D2T3	
40		Nut	2	2	2	GB/T6172.1 M3
41	21WF4-067	Screw	1	1	1	
42	248WF1-011	Washer	1	1	1	
43	92WF2-029	Rubber plug	2	2	2	
44	92WF2-030	Rubber plug	1	1	1	
45	92WF2-028	Rubber plug	1	1	1	
46	92WF2-028	Rubber plug	1	1	1	
47	92WF2-028	Rubber plug	1	1	1	
48	92WF2-031	Rubber plug	1	1	1	
49	92WF2-032	Rubber plug	1	1	1	
50	199WF2-015	Rubber plug	1	1	1	
51		Pin	1	1	1	GB/T879.1 4.5X20
52	248WF1-005	Pin	1	1	1	
53	123WF3-033	Screw	1	1	1	
54	119WF8-017	Ground wire assy.	/	/	1	
55	1WF1-011	Screw	/	/	1	
56		Washer	/	/	1	GB862.1 5
57	21WF4-056	Mark	/	/	1	
58	1KT1-005	Caution label	1	1	1	
59		Nut	2	2	2	GB/T6172.1 M3
60		Screw	2	2	2	GB/T818 M3X4
61	248WF1-012	Slide plate	1	1	1	
62	248WF1-013	Oil felt	1	1	1	
63	248WF1-014	Plate	1	1	1	

www.collierequipment.com

2. Arm shaft & thread take-up mechanism

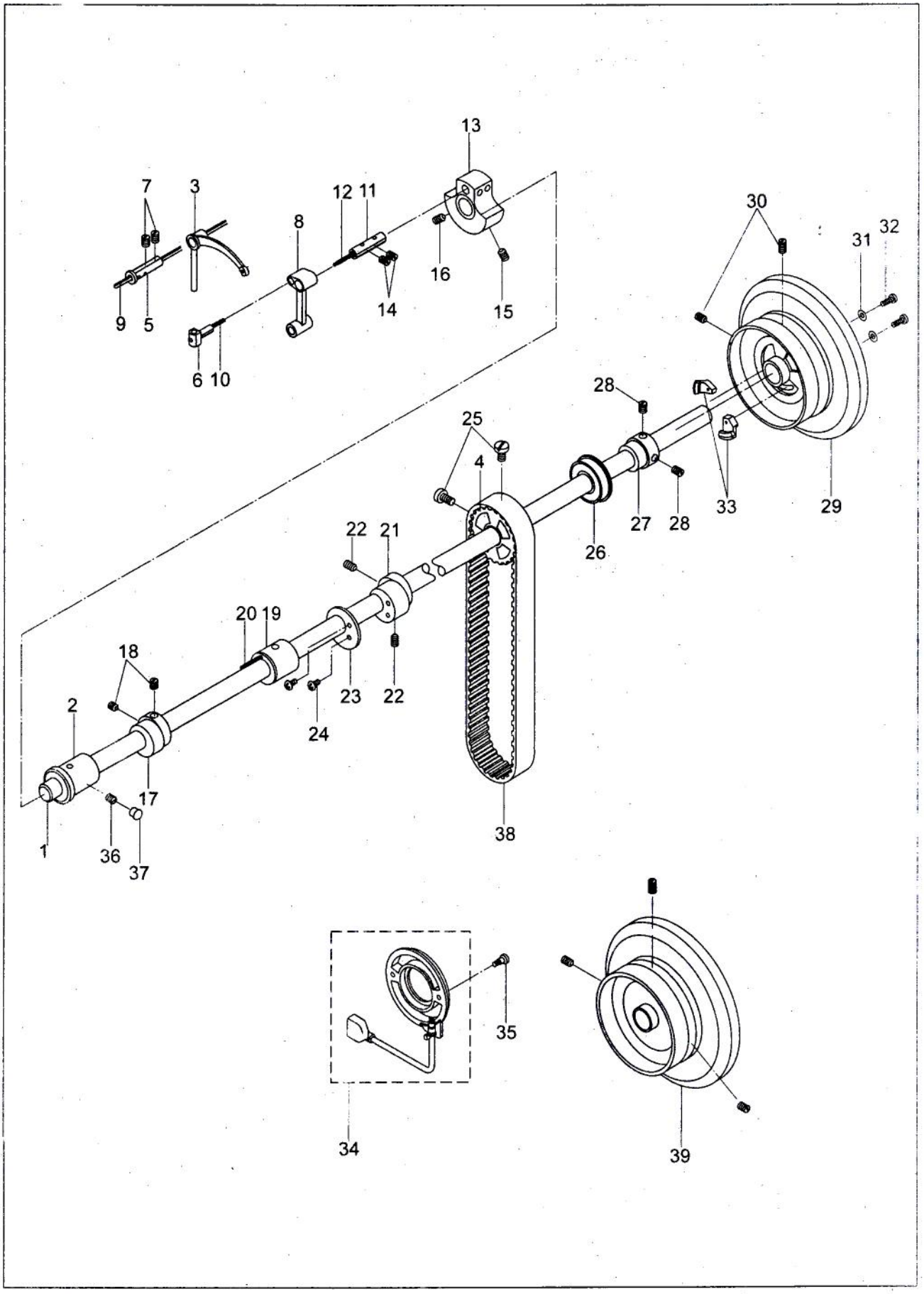

www.collierequipment.com

2. Arm shaft & thread take-up mechanism

No.	Part Number	Name	Qt.			Remark
			2263	2263V	-D2T3	
1	199WF1-051	Arm shaft	1	1	1	
2	92WF1-009	Front bushing, arm shaft	1	1	1	
3	92WF1-004	Thread take-up lever	1	1	1	
4	199WF1-002	Synchronized pulley assy. U	1	1	1	
5	16WF1-010	Pin shaft	1	1	1	
6	92WF1-005	Slide block	1	1	1	
7	1WF5-019	Screw	2	2	2	
8	92WF1-006	Needle bar link	1	1	1	
9	199WF1-003	Oil wick	1	1	1	Φ2.5×450
10	199WF1-004	Oil wick	1	1	1	L=30
11	50WF1-008	Pin	1	1	1	
12	199WF1-005	Oil wick	1	1	1	Φ7×30
13	92WF1-007	Needle bar crank	1	1	1	
14	1WF5-019	Screw	2	2	2	
15	50WF1-013	Screw	1	1	1	
16	17050	Screw	1	1	1	
17	92WF3-014	Feed cam	1	1	1	
18	1WF2-010	Screw	2	2	2	
19	92WF1-010	Middle bushing, arm shaft	1	1	1	
20	199WF1-006	Oil wick	1	1	1	Φ2×150
21	92WF3-029	Feed eccentric cam	1	1	1	
22	1WF2-010	Screw	2	2	2	
23	92WF3-030	Retaining block	2	2	2	
24	7WF5-017	Screw	1	1	1	
25	92WF1-014	Screw	2	2	2	
26	36WF3-019A	Bearing, arm shaft	1	1	1	50105 25×47×12
27	92WF1-011	Bushing	1	1	1	
28	57WF-009	Screw	2	2	2	M6
29	228WF1-010	Hand wheel	/	/	1	
30	17WF4-016	Screw	2	2	2	
31	2KT7-009	Washer	/	/	2	
32	1WF3-009	Screw	/	/	2	
33	119WF10-003	Magnet assy.	/	/	1	
34	119WF10-001	Synchronizer assy.	/	/	1	
35	119WF10-002	Screw	/	/	2	
36	1WF5-019	Screw	2	2	2	
37	92WF2-029	Rubber plug	1	1	1	
38	248WF1-001	Timing belt	1	1	1	
39	92WF1-015	Hand heel	1	1	/	

www.collierequipment.com

3. Needle bar rocking frame mechanism

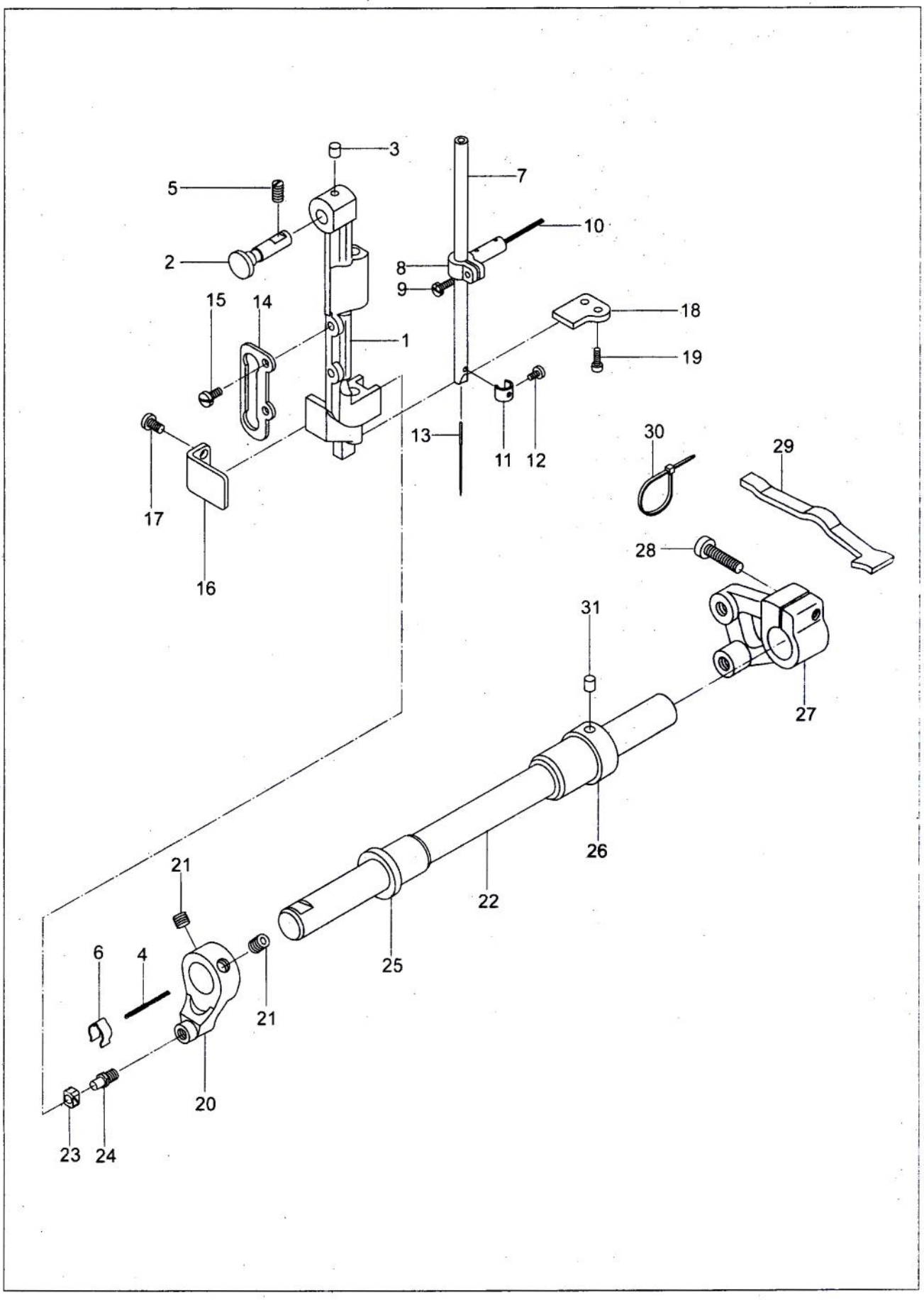

www.collierequipment.com

3. Needle bar rocking frame mechanism

No.	Part Number	Name	Qt.	Remark
1	248WF3-001	Needle bar rocking frame	1	
2	92WF3-009	Pin	1	
3	92WF3-007	Oil felt	1	
4	199WF3-001	Oil wick	1	Φ2×160
5	1WF5-019	Screw	1	
6	92WF3-003	Leaf spring	1	
7	248WF3-002	Needle bar	1	
8	248WF3-003	Needle bar joint	1	
9	17WF3-008	Screw	2	
10	199WF3-002	Oil wick	1	Φ6×20
11	248WF3-004	Needle bar thread guide	1	
12	22T2-017	Screw	1	
13		Needle	1	DP×17 23#
14	240WF3-003	Guide rail	1	
15	1WF1-011	Screw	2	
16	92WF3-011	Position plate (2)	1	
17	W01111	Screw	2	
18	92WF3-010	Position plate (1)	1	
19	21WF1-054	Screw	2	
20	92WF3-002A	Crank	1	
21	92WF3-070	Screw	2	
22	92WF3-001	Rocking shaft	1	
23	92WF3-004	Slide block	1	
24	92WF3-002B	Pin	1	
25	92WF3-005	Bushing , L	1	
26	92WF3-006	Bushing, R	1	
27	248WF3-005	Crank	1	
28	52WF1-050	Screw	1	
29	92WF3-013	Oil felt	1	
30	2KT7-001A	Band	2	
31	92WF3-007	Oil felt	1	

www.collierequipment.com

4. Upper feed mechanism

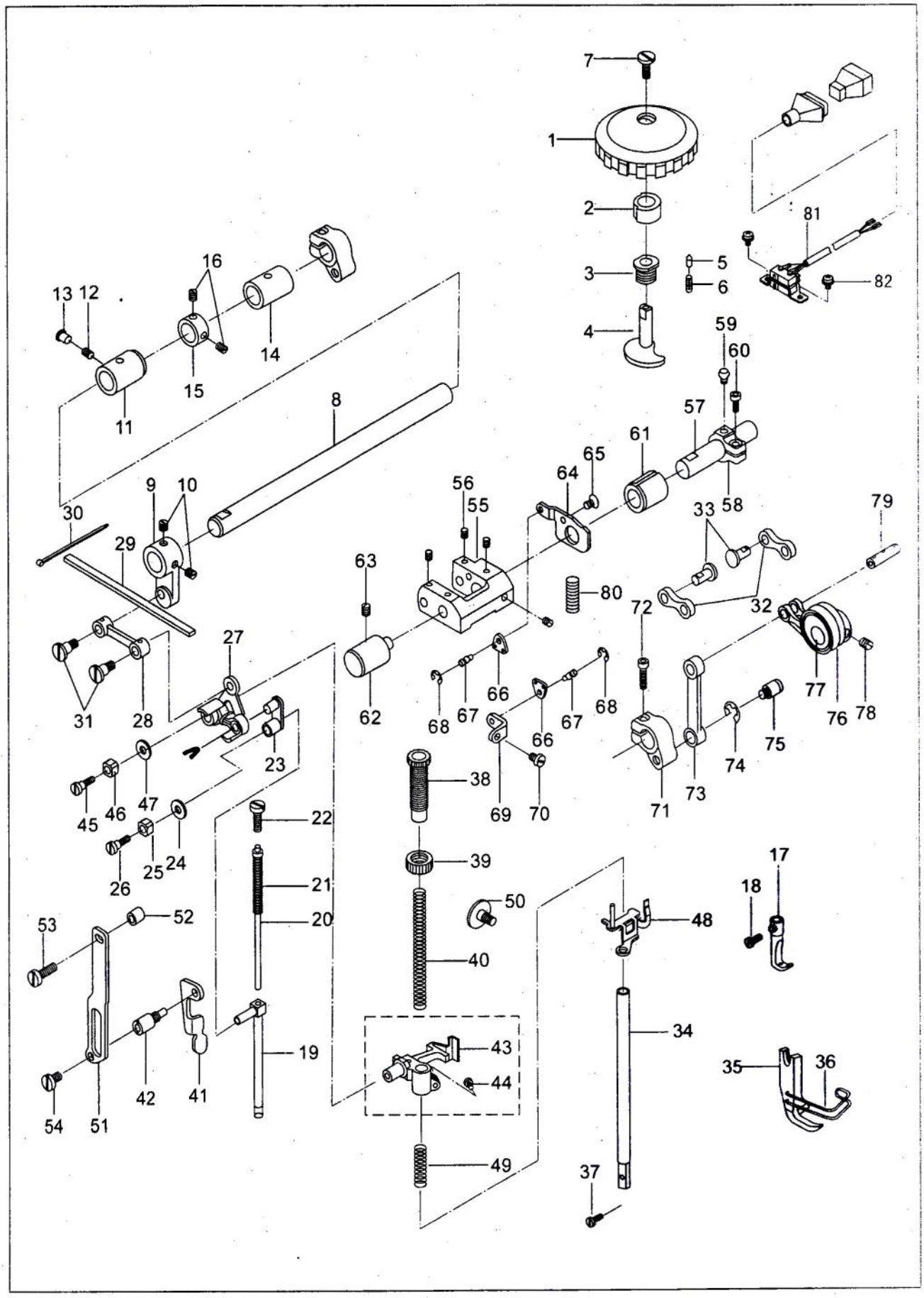

www.collierequipment.com

4. Upper feed mechanism

No.	Part Number	Name	Qt.	Remark
1	119WF7-017A	Dial	1	
2	119WF7-017B	Bushing	1	
3	119WF7-019	Bushing	1	
4	119WF7-018	Shaft	1	
5	994131	Pin	1	
6	93WF8-002	Spring	1	
7	302395	Screw	1	
8	92WF3-018	Shaft	1	
9	92WF3-019	Crank	1	
10	2KT5-027	Screw	2	
11	199WF4-001	Front bushing	1	
12	1WF5-019	Screw	1	
13	92WF2-029	Rubber plug	1	
14	92WF3-021	Rear bushing	1	
15	92WF3-022	Collar	1	
16	22T3-002B2	Screw	2	
17	248WF4-001	Walking foot	1	
18	93WF3-004	Screw	1	
19	248WF4-002	Walking foot lifting bar	1	
20	92WF3-024	Spring guide bar assy.	1	
21	50WF3-032	Spring	1	
22	6K1-048	Regulating screw	1	
23	50WF3-027	Link	1	
24	50WF3-028	Felt	1	
25	50WF3-029	Slide block	1	
26	20T4-006	Screw	1	
27	92WF3-025	Lifting plate	1	
28	92WF3-026	Link	1	
29	92WF3-027	Oil felt	1	
30	2KT7-001A	Band	2	
31	92WF3-028	Screw	2	
32	119WF7-011	Link	2	
33	994118	Pin shaft	2	
34	248WF4-005	Presser bar	1	
35	248WF4-003	Presser foot	1	
36	248WF4-004	Finger guard	1	
37	36WF4-009	Screw	1	
38	92WF4-003	Regulating bolt	1	
39	1KT4-002	Nut	1	
40	92WF4-023	Spring	1	
41	92WF4-004	Foot lift lever	1	
42	92WF4-005	Lift lever shaft	1	

www.collierequipment.com

4. Upper feed mechanism

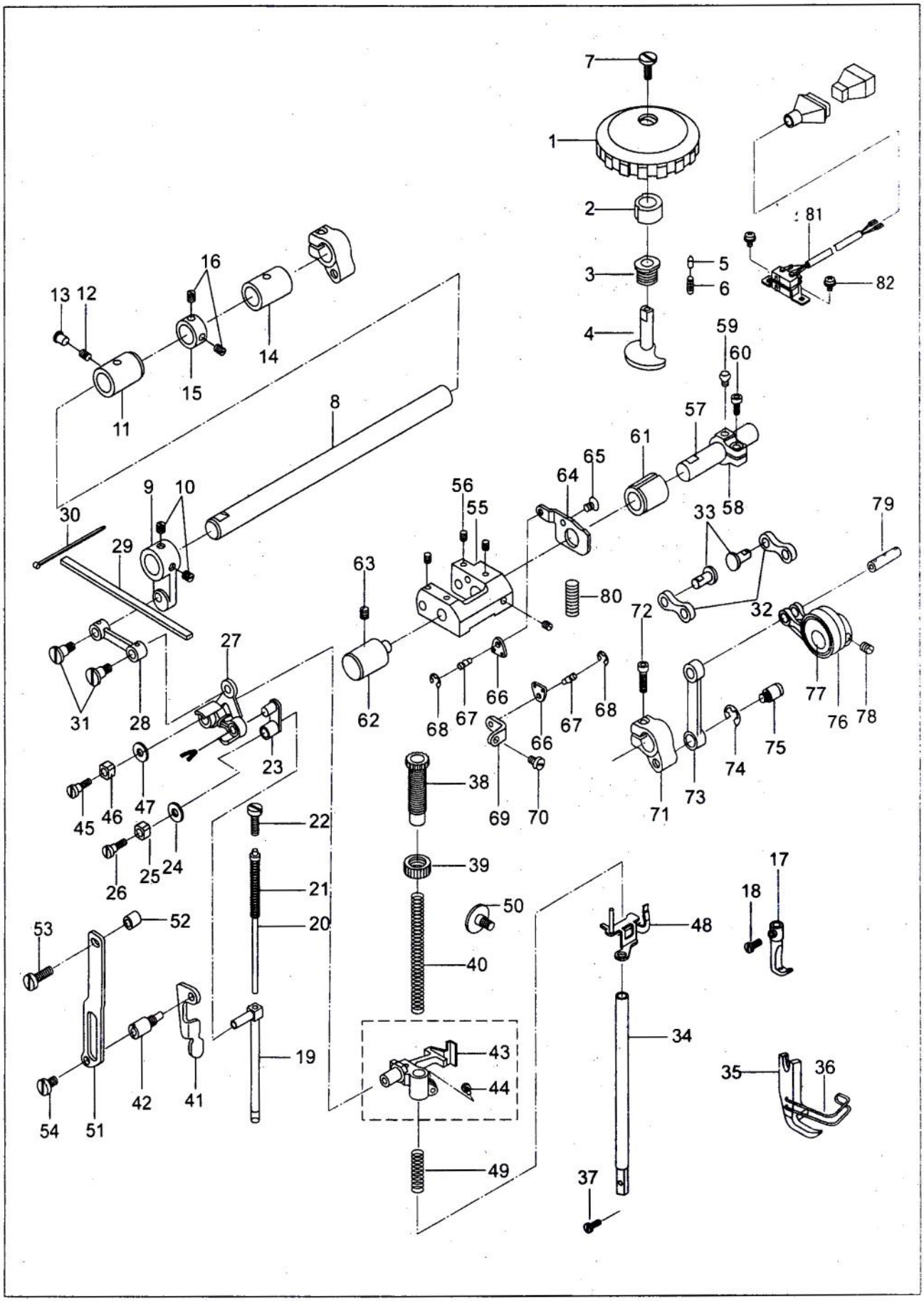

www.collierequipment.com

4. Upper feed mechanism

No.	Part Number	Name	Qt.			Remark
			2263	2263V	-D2T3	
43	92WF4-006	Bracket	1	1	1	
44	1WF1-011	Screw	1	1	1	
45	92WF4-007	Screw	1	1	1	
46	50WF3-029	Slide block	1	1	1	
47	92WF4-008	Washer	1	1	1	
48	92WF4-009	Releasing plate	1	1	1	
49	50WF4-013	Spring	1	1	1	
50	50WF4-014	Screw	1	1	1	
51	92WF4-010	Guide plate	1	1	1	
52	92WF4-011	Washer	1	1	1	
53	60WF4-003	Screw(U)	1	1	1	
54	52WF3-027	Screw(L)	1	1	1	
55	119WF7-001	Adjusting bracket	1	1	1	
56	6K2-043	Screw	4	4	4	
57	119WF7-003	Shaft	1	1	1	
58	119WF7-004	Crank	1	1	1	
59	119WF7-005	Screw	1	1	1	
60	72WF5-021	Screw	1	1	1	
61	119WF7-002	Bushing	1	1	1	
62	92WF3-037	Shaft	1	1	1	
63	1WF5-019	Screw	1	1	1	
64	119WF7-012	Retaining plate	1	1	1	
65		Screw	1	1	1	GB/T819.2 M5×8
66	119WF7-014	Connecting plate	2	2	2	
67	119WF7-015	Screw	2	2	2	
68		Retaining ring	2	2	2	GB896 5
69	119WF7-016	Hanger	1	1	1	
70	50WF3-089	Screw	1	1	1	
71	119WF7-009	Crank	1	1	1	
72	80WF6-025	Screw	1	1	1	
73	119WF7-008B	Link	1	1	1	
74		Retaining ring	1	1	1	GB896 8
75	119WF7-010	Screw	1	1	1	
76	119WF7-008A	Link	1	1	1	
77	119WF7-007	Needle bearing	1	1	1	
78	21WF1-022	Screw	1	1	1	
79	119WF7-008C	Pin shaft	1	1	1	
80	119WF7-013	Spring	1	1	1	
81	119WF7-020	Speed adjusting assy.	/	/	1	
82		Screw	/	/	2	

www.collierequipment.com

5. Lower feed, reverse and feed regulating

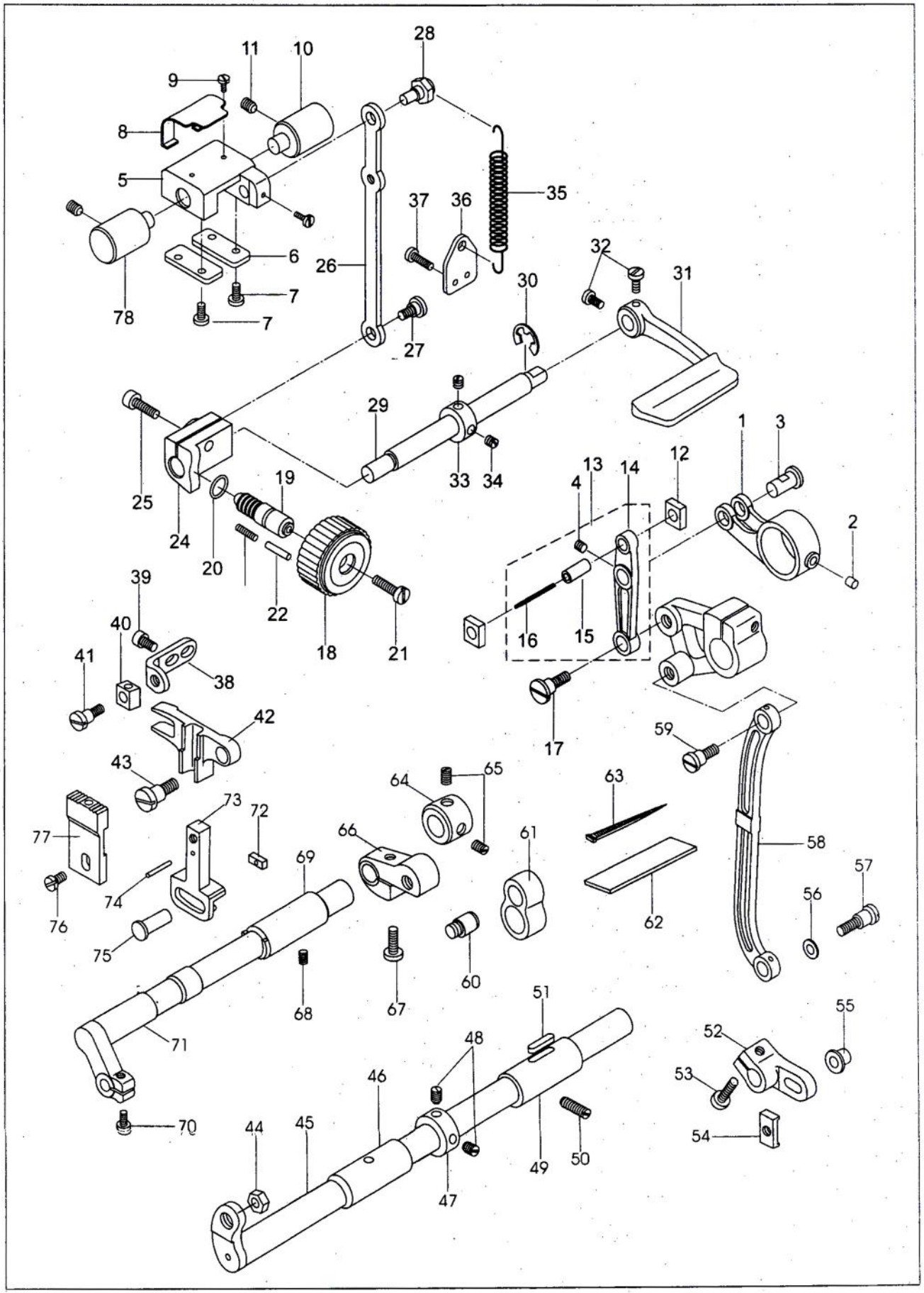

www.collierequipment.com

5. Lower feed, reverse and feed regulating

No.	Part Number	Name	Qt.	Remark
1	92WF3-031	Feed link	1	
2	92WF3-032	Oil felt	1	
3	92WF3-033	Pin	1	
4	6K2-043	Screw	1	M5
5	92WF3-034	Reverse feed bracket	1	
6	92WF3-035	Retaining plate	2	
7	1WF1-011	Screw	4	
8	92WF3-036	Presser plate	1	
9	16WF1-059	Screw	2	
10	92WF3-037	Shaft(Long)	1	
11	1WF5-019	Screw	2	
12	92WF3-038	Slide block	2	
13	92WF3-039	Feed rocking bar assy.	1	
14	92WF3-039A	Feed rocking bar	1	
15	92WF3-039B	Pin	1	
16	199WF3-003	Oil wick	1	Φ1.5×35
17	92WF3-040	Screw	1	
18	248WF5-022	Stitch regulating dial	1	
19	92WF3-042	Screw bar	1	
20	92WF3-043	Seal ring	1	
21	92WF3-044	Screw	1	
22	17WF4-035	Stop pin	1	
23	50WF3-058	Spring	1	
24	248WF5-021	Holder	1	
25	6K2-024	Screw	1	M6
26	92WF3-046	Link	1	
27	92WF3-047	Screw	1	
28	92WF3-048	Eccentric pin	1	
29	92WF3-049	Reverse feed lever shaft	1	
30	92WF3-071	Retaining ring	1	GB896 9
31	92WF3-050	Reverse feed lever	1	
32	92WF3-051	Screw	2	
33	92WF3-052	Collar	1	
34	22T3-002B2	Screw	2	
35	92WF3-053	Spring	1	
36	92WF3-054	Spring hook	1	
37	1WF3-009	Screw	2	
38	248WF5-012	Positioning plate	1	
39	36WF2-040	Screw	2	

www.collierequipment.com

5. Lower feed, reverse and feed regulating

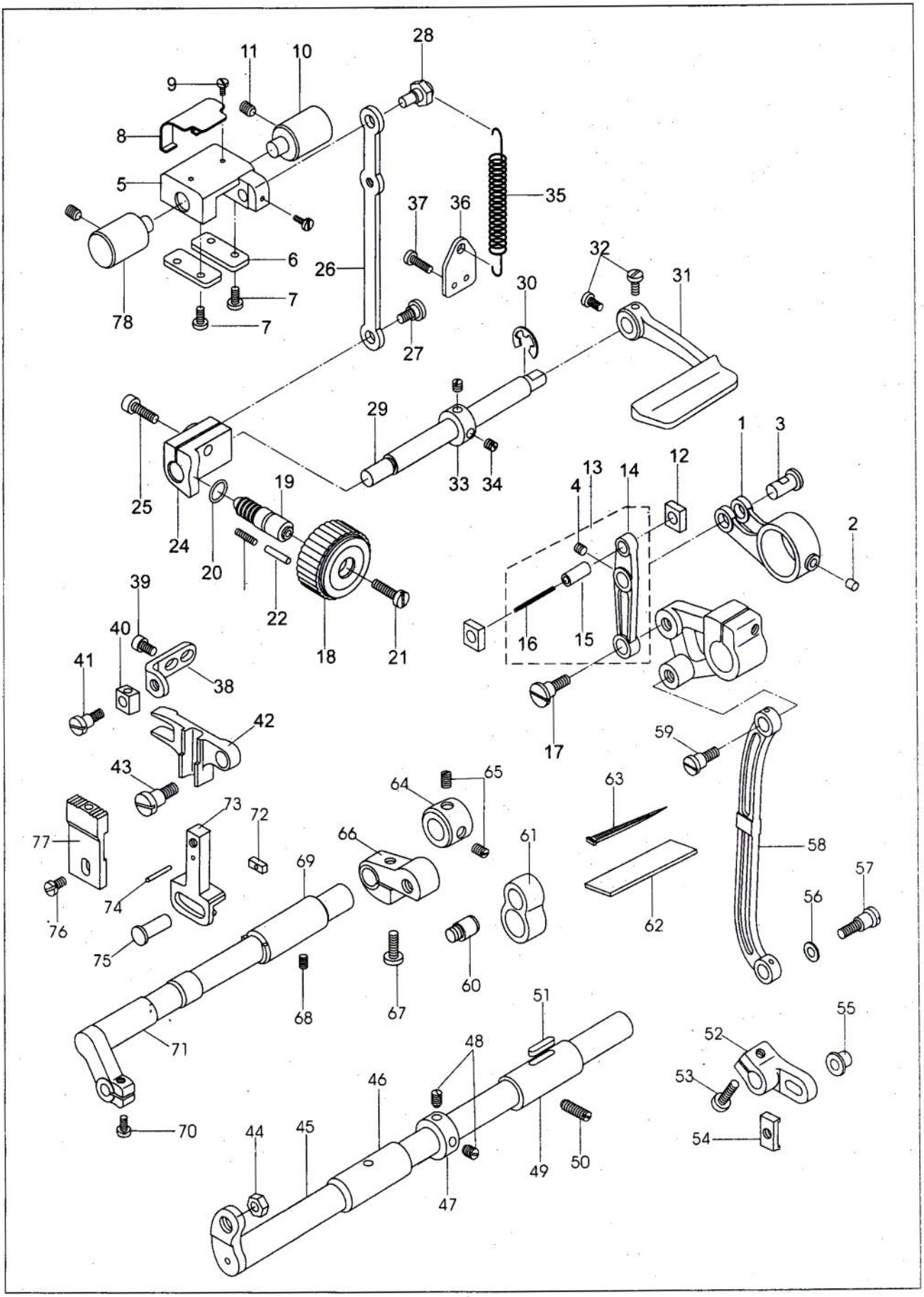

www.collierequipment.com

5. Lower feed, reverse and feed regulating

No.	Part Number	Name	Qt.	Remark
40	92WF1-015	Slide block	1	
41	248WF5-014	Screw	1	
42	248WF5-015	Guide	1	
43	50WF3-083	Screw	1	
44	50WF3-024	Nut	1	
45	248WF5-016	Feed shaft	1	
46	50WF3-075	Bush, L	1	
47	50WF3-079	Feed shaft collar	1	
48	22T2-005B5	Screw	2	
49	248WF5-017	Bush, R	2	
50	50WF3-017	Screw	1	
51	50WF3-077	Oil felt	1	
52	248WF5-018	Crank	1	
53	41WF3-018	Screw	1	
54	248WF5-019	Plate	1	
55	248WF5-023	Bush	1	
56	42WF1-009	Washer	1	
57	50WF3-010	Screw	1	
58	92WF3-058	Link	1	
59	92WF3-059	Screw	1	
60	52WF5-014	Pin	1	
61	248WF5-010	Link	1	
62	248WF5-011	Oil felt	1	
63		Band	1	L=120mm
64	248WF5-008	Collar	1	
65	80WF6-036	Screw	2	
66	248WF5-007	Crank	1	
67	7KT5-020	Screw	1	
68	41WF3-005	Screw	1	
69	248WF5-006	Bush	1	
70	22T6-001A1B	Screw	1	
71	248WF5-005	Feed dog lifting shaft	1	
72	248WF5-004	Slide block	1	
73	248WF5-002	Feed dog carrier	1	
74	50WF3-092	Eccentric pin	1	
75	248WF5-003	Shaft	1	
76	36WF2-040	Screw	2	
77	248WF5-001	Feed dog	1	
78	248WF5-020	Shaft (Short)	1	

www.collierequipment.com

6. Lower shaft and rotating hook

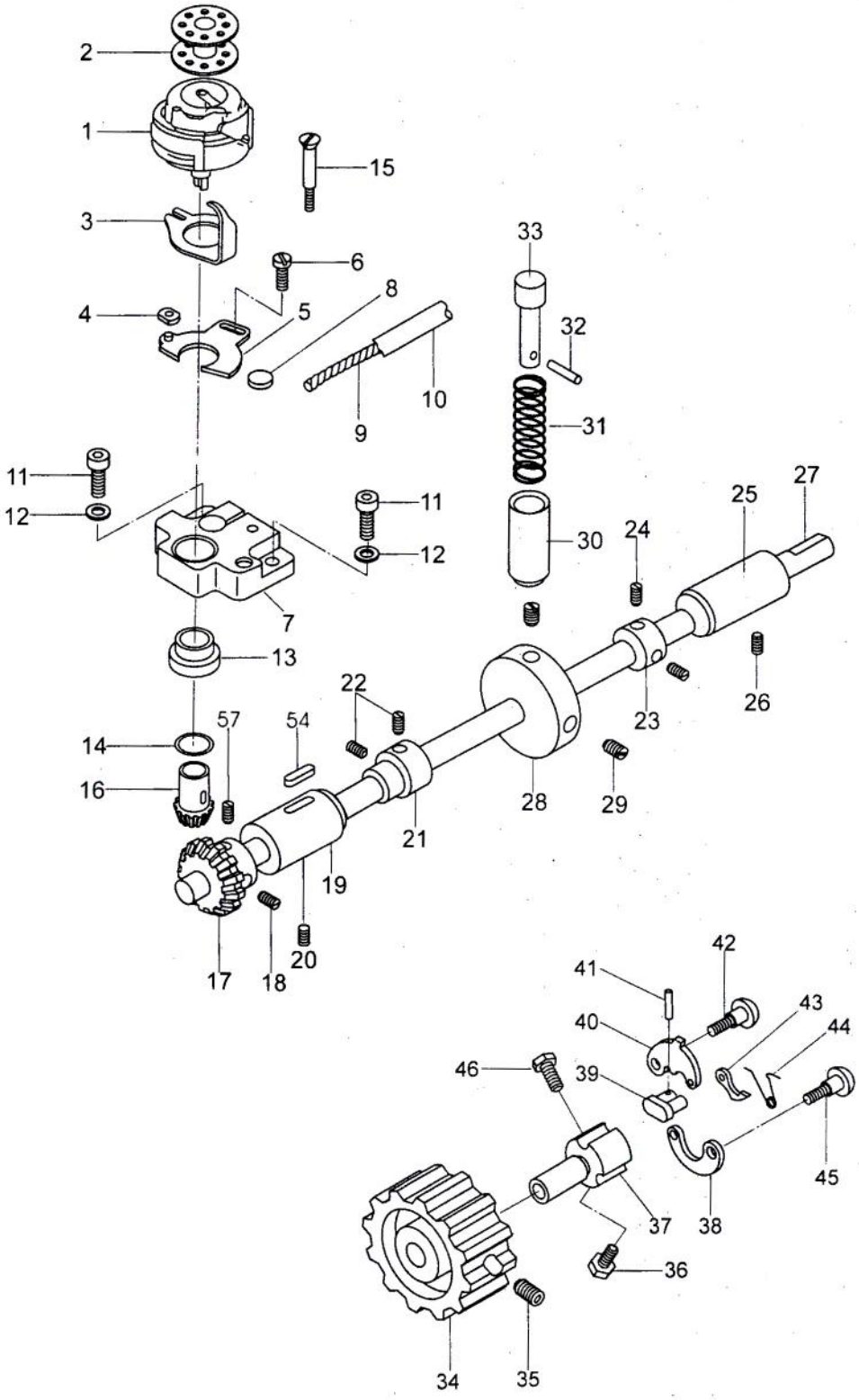

www.collierequipment.com

6. Lower shaft and rotating hook

No.	Part Number	Name	Qt.			Remark
			2263	2263V	-D2T3	
1	248WF6-012	Hook	/	/	1	
	SKRT341-NR	Hook	1	1	/	
2	994539	Bobbin	/	/	1	
	33T1-027	Bobbin	1	1	/	
3	248WF6-002	Bobbin thread opener	1	1	1	
4	50WF1-048	Slide block	1	1	1	
5	248WF6--001	Adjust plate	1	1	1	
6	16WF2-017	Screw	1	1	1	
7	248WF6-003	Hook saddle	/	/	1	
	50WF1-050	Hook saddle	1	1	/	
8	248WF6-004	Oil felt	1	1	1	
9		Oil wick	1	1	1	
10		Oil pipe	1	1	1	ϕ3 L=60
11		Screw	/	/	2	GB/T70.1 M5X10
		Screw	2	2	/	GB/T70.1 M5X14
12		Washer	2	2	2	GB/T95 5
13	248WF6-006	Bush	/	/	1	
	50WF1-045	Bush	1	1	/	
14	50WF1-044	Washer	1	1	1	
15	50WF1-046	Screw	1	1	1	
16	248WF6-005	Hook gear	/	/	1	
	50WF1-043	Hook gear	1	1	/	
17	50WF1-040	Gear, lower shaft	1	1	1	
18	50WF1-041	Screw	3	3	3	
19	50WF1-036	Bush, lower shaft	1	1	1	
20	18WF3-022	Screw	1	1	1	
21	248WF6-011	Feed dog lifting cam	1	/	1	
22	50WF1-041	Screw	2	2	2	
23	248WF6-009	Collar	1	1	1	
24	50WF3-017	Screw	2	2	2	
25	248WF6-008	Bush, lower shaft	1	1	1	
26	20T4-003	Screw	1	1	1	
27	248WF6-010	Lower shaft	1	1	1	
28	50WF6-012	Stop wheel	1	1	1	
29	JO.O.40	Screw	2	2	2	
30	50WF1-053	Bush	1	1	1	
31	16WF3-046	Spring	1	1	1	
32		Pin	1	1	1	
33	50WF1-051	Button	1	1	1	

www.collierequipment.com

6. Lower shaft and rotating hook

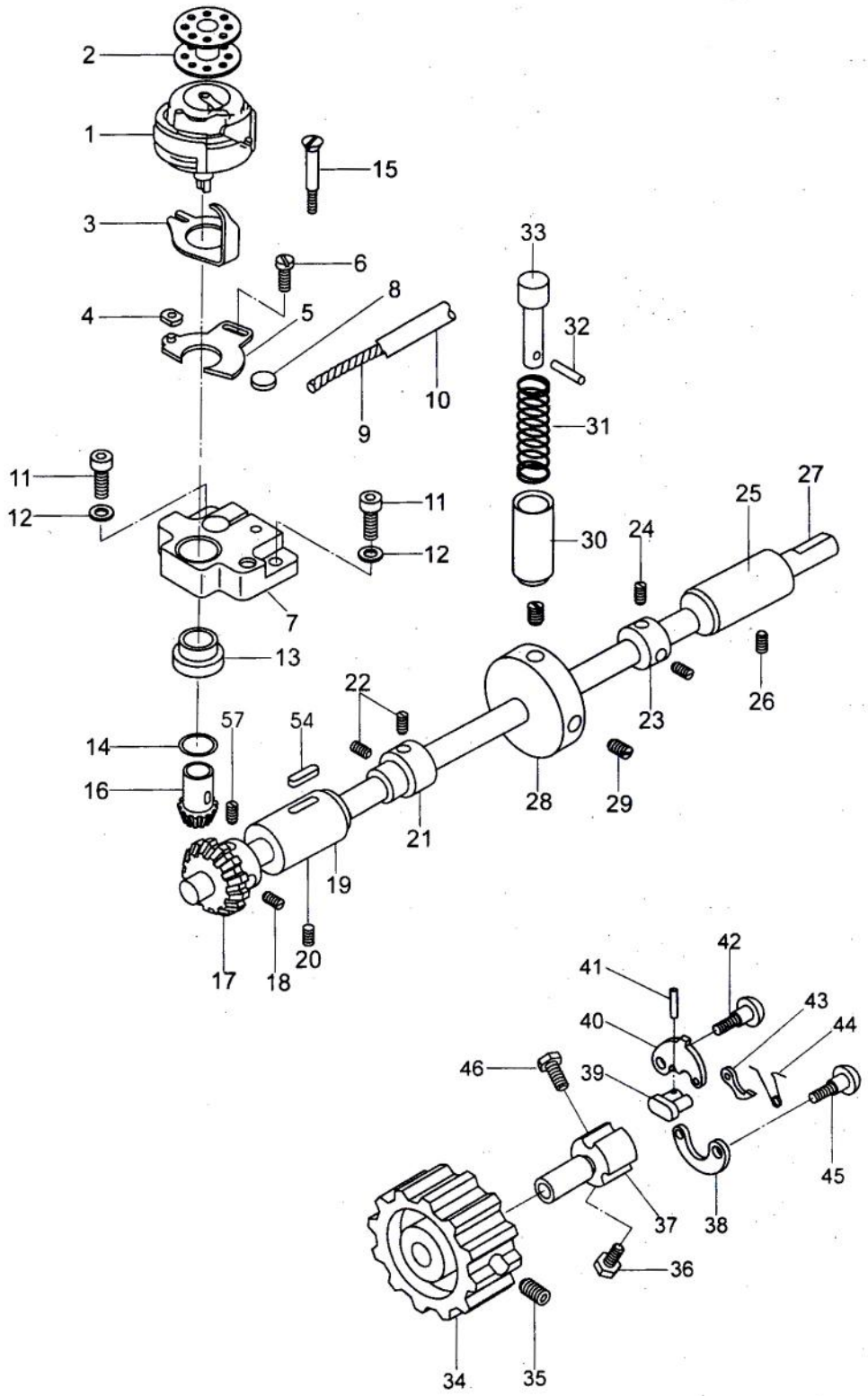

www.collierequipment.com

6. Lower shaft and rotating hook

No.	Part Number	Name	Qt.	Remark
34	110WF1-017	Synchronized pulley assy.	1	
35	22WF1-020	Screw	2	
36	22WF1-052	Screw	1	
37	103614	Bush	1	
38	22WF1-013	Spring plate	1	
39	22WF1-017	Link	1	
40	22WF1-018	Plate	1	
41		Pin	1	GB/T91 1.2X8
42	22WF1-019	Screw bar	1	
43	22WF1-016	Stopper	1	
44	22WF1-014	Spring	1	
45	22WF1-015	Eccentric pin	1	
46	22WF1-012	Screw	1	

www.collierequipment.com

7. Thread trimming mechanism (GC2263-D2T3)

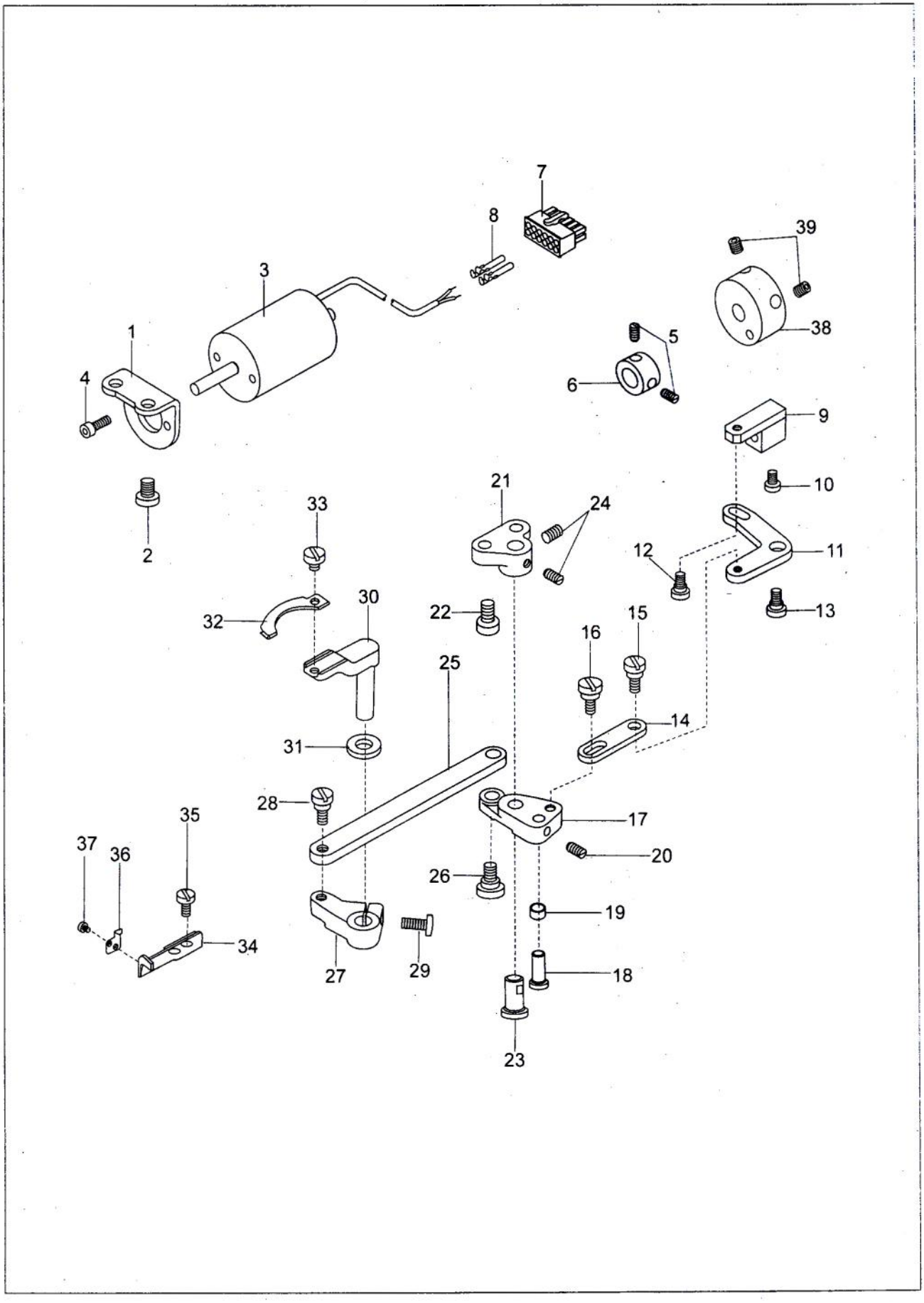

www.collierequipment.com

7. Thread trimming mechanism (GC2263-D2T3)

No.	Part Number	Name	Qt.	Remark
1	248WF7-001	Solenoid installing bracket	1	
2	13WF2-045	Screw	2	
3	248WF7-002	Trimming solenoid	1	
4	18WF3-021	Screw	2	
5	36WF5-021	Screw	2	
6	248WF7-004	Collar	1	
7	119WF8-018	Connector cover	1	
8	248WF7-003	Connector	2	
9	248WF7-005	Crank base	1	
10	21WF1-060	Screw	2	
11	248WF7-006	Trimming crank	1	
12	248WF7-007	Screw	1	
13	248WF7-008	Screw	1	
14	248WF7-009	Adjusting link	1	
15	248WF7-010	Screw	1	
16	248WF7-011	Screw	1	
17	248WF7-012	Trimming driven crank	1	
18	248WF7-013	Pin	1	
19	248WF7-019	Roller	1	
20	36WF5-021	Screw	1	
21	248WF7-015	Link crank	1	
22	36WF1-056	Screw	2	
23	248WF7-016	Pin	1	
24	36WF5-021	Screw	2	
25	248WF7-017	Link	1	
26	248WF7-018	Screw	1	
27	248WF7-019	Crank	1	
28	248WF7-020	Screw	1	
29	7KT3-035	Screw	1	
30	248WF7-021	Movable knife carrier	1	
31	248WF7-022ABC	Washer	1	
32	248WF7-023	Movable knife	1	
33	6KT1-063	Screw	1	
34	248WF7-024	Fixed knife	1	
35	42WF1-017	Screw	2	
36	248WF7-025	Fixed knife bracket	1	
37	248WF7-027	Screw	2	
38	248WF7-026	Trimming cam	1	
39	2KT5-027	Screw	2	

www.collierequipment.com

8.Auto-reverse feed mechanism (GC2263-D2T3)

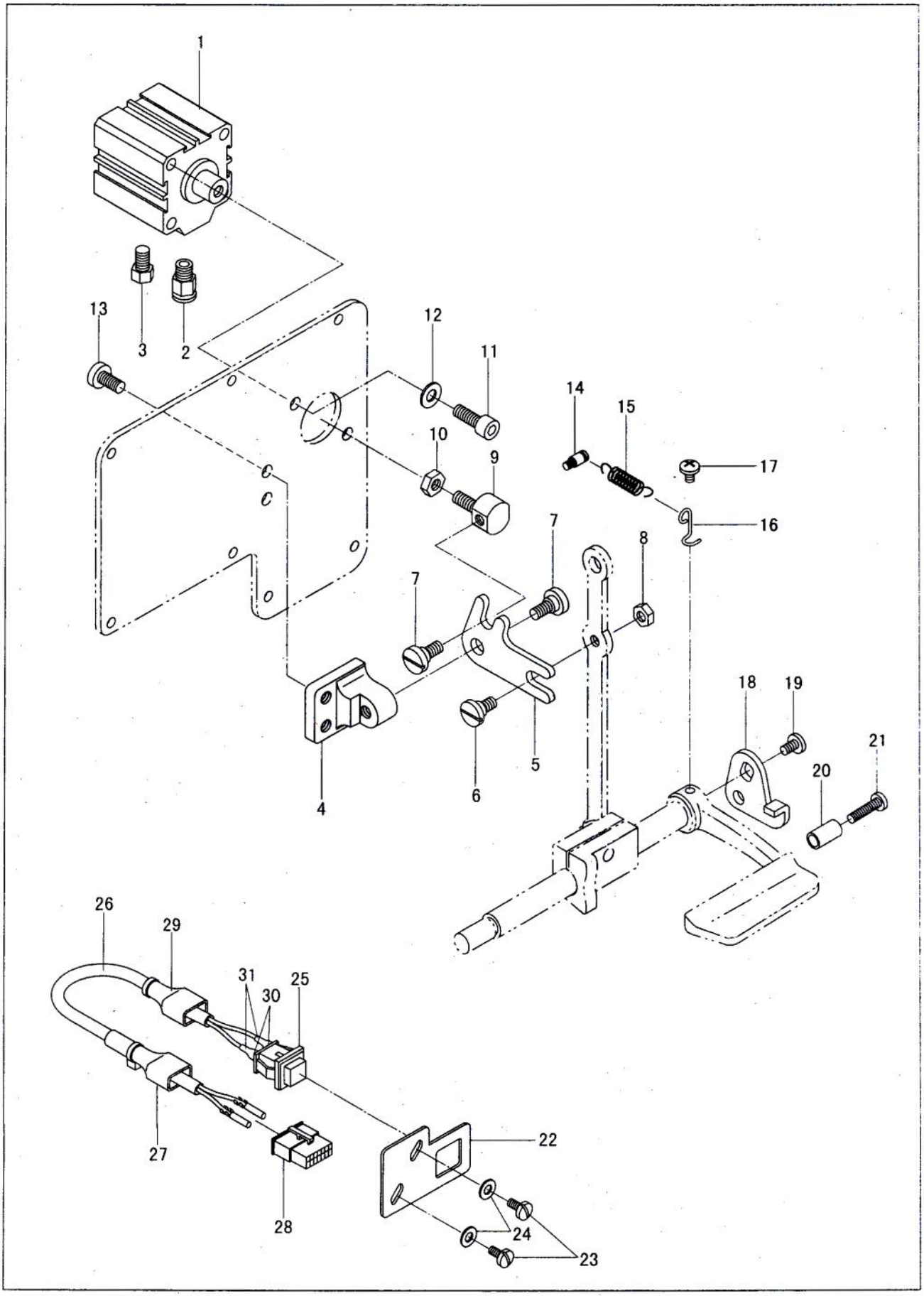

www.collierequipment.com

8.Auto-reverse feed mechanism (GC2263-D2T3)

No.	Part Number	Name	Qt.	Remark
1	119WF8-001A	Cylinder	1	
2	119WF8-001C	Joint	1	
3	119WF8-001B	Silencer	1	
4	119WF8-004	Bracket	1	
5	119WF8-005	Driven lever	1	
6	119WF8-003	Screw	1	
7	119WF8-006	Screw	2	
8	22WF3-004	Nut	1	
9	119WF8-002	Joint	1	
10	22T5-011A7	Nut	1	
11	7KT1-003	Screw	4	
12	72WF2-010	Washer	4	
13	36WF1-056	Screw	2	
14	119WF8-011	Screw bar	1	
15	119WF8-008	Spring	1	
16	119WF8-009	Hook	1	
17	119WF8-010	Screw	1	
18	119WF8-007	Stop plate	1	
19	22T5-010D3	Screw	1	
20	119WF8-012	Block	1	
21	36WF4-027	Screw	1	
22	119WF8-013	Button base	1	
23	22WF4-014	Screw	2	
24	2KT7-009	Washer	2	
25	119WF8-019	Reverse function button	1	
26	119WF8-016	Connector assy.	1	
27	129WF6-014	Plug cover	1	
28	119WF8-018	Plug	1	
29	177WF5-010	Cover	1	
30	80WF8-004	Plug	2	
31	80WF8-005	Cover	2	

www.collierequipment.com

9.Tension release mechanism (GC2263-D2T3)

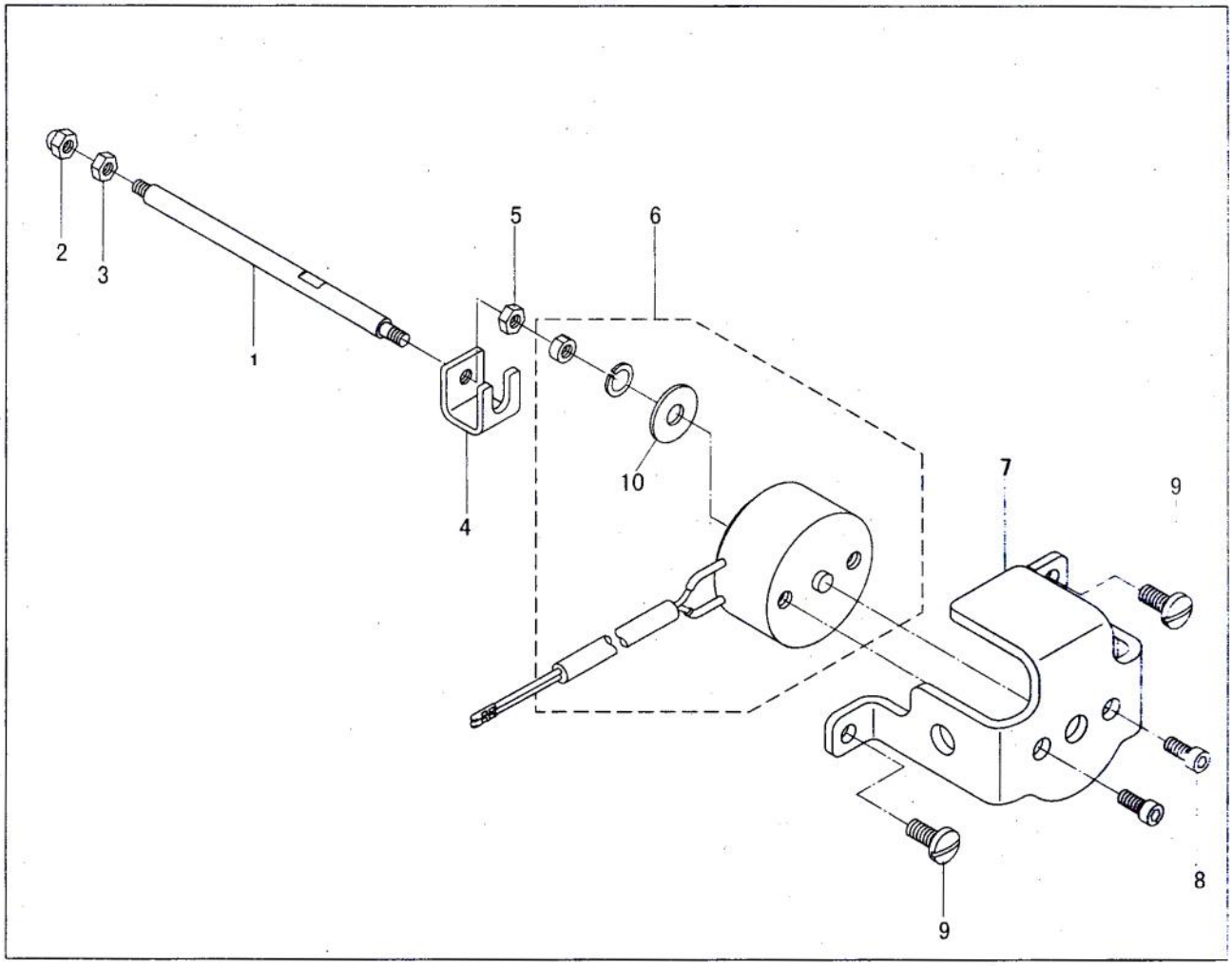

No.	Part Number	Name	Qt.	Remark
1	119WF9-004	Tension release shaft	1	
2		Nut	1	GB923 M4
3	11KT3-021	Nut	1	
4	119WF9-003	Solenoid joint	1	
5	11KT3-021	Nut	1	
6	119WF9-001	Tension release solenoid	1	
7	119WF9-002	Solenoid installing base	1	
8		Screw	2	GB/T70.1 M4 x 5
9	7WF5-017	Screw	2	
10	228WF2-004	Washer	1	

www.collierequipment.com

10.Auto-lifer mechanism (GC2263-D2T3)

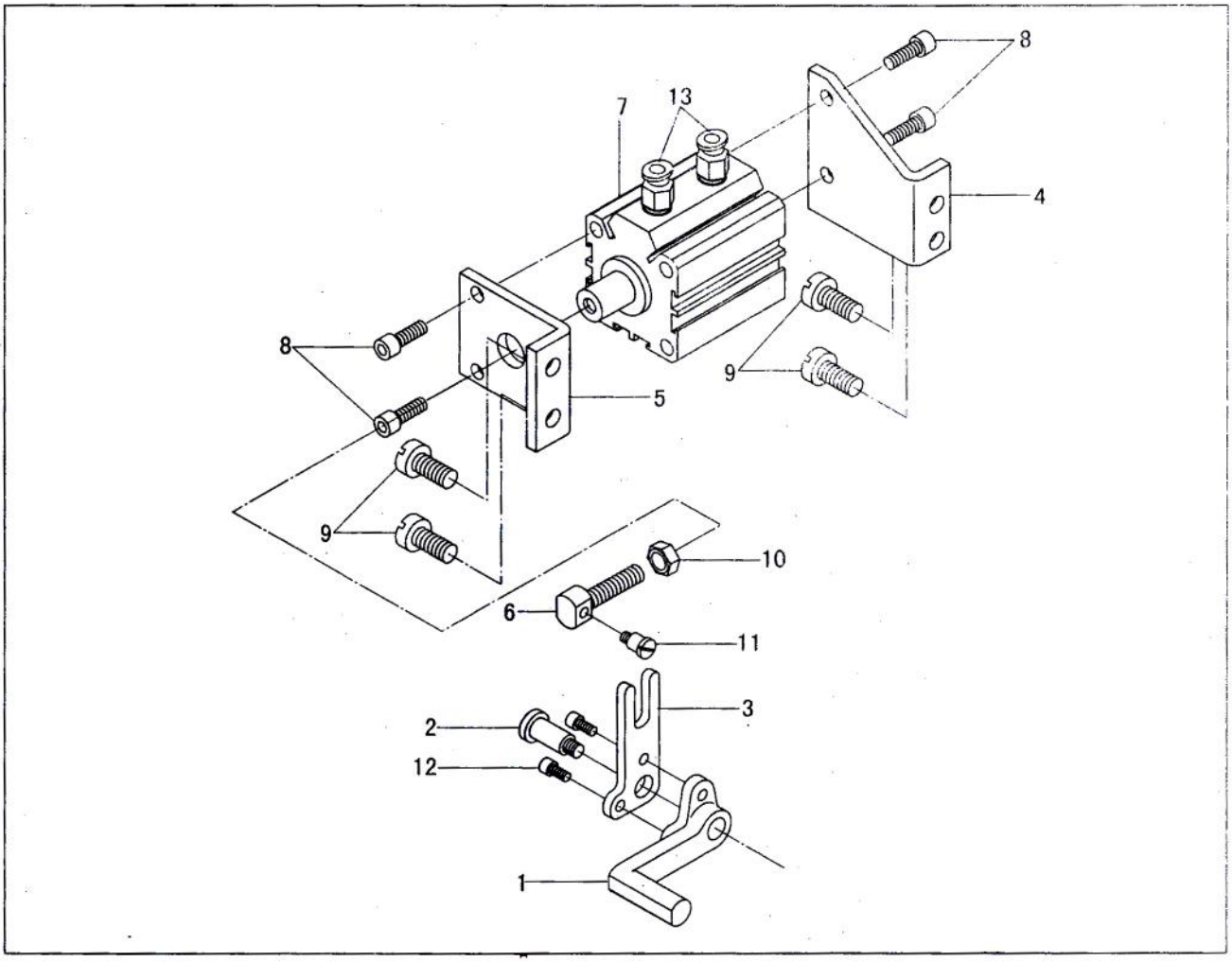

No.	Part Number	Name	Qt.	Remark
1	228WF5-001	Crank	1	
2	228WF5-002	Screw	1	
3	228WF5-003	Driven lever	1	
4	228WF5-004	Cylinder support(1)	1	
5	228WF5-005	Cylinder support(2)	1	
6	228WF5-006	Connector	1	
7	228WF5-008	Cylinder	1	
8	7KT1-003	Screw	4	
9	13WF2-045	Screw	4	
10		Nut	1	
11	228WF5-007	Screw	1	
12	13WF6-010	Screw	2	
13	93WF22-006	Joint	2	APC6-01

www.collierequipment.com

11.Lubrication components

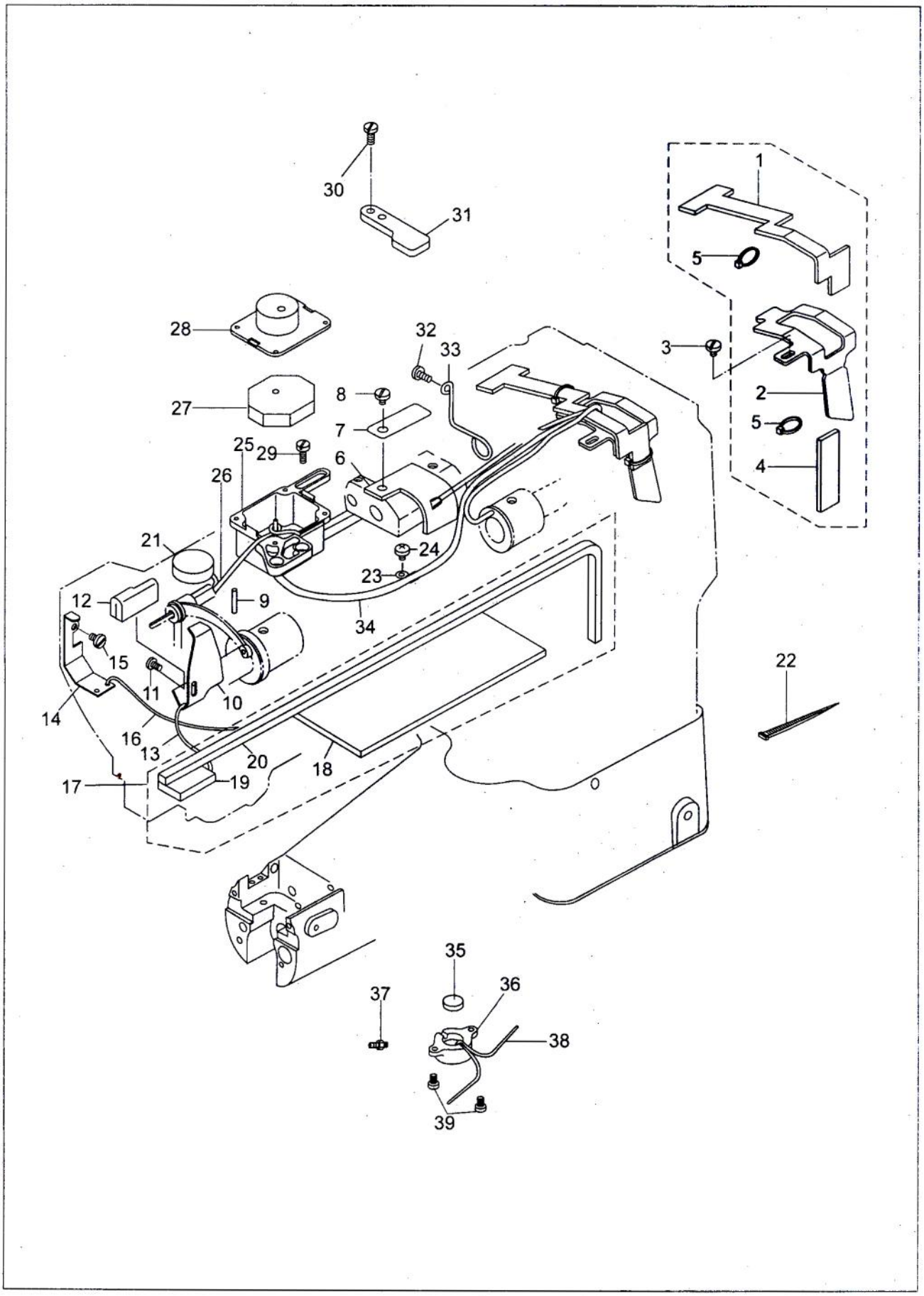

www.collierequipment.com

11.Lubrication components

No.	Part Number	Name	Qt.	Remark
1	92WF5-001	Oil felt	1	
2	92WF5-002	Bracket	1	
3	1WF1-011	Screw	1	
4	92WF5-003	Oil felt	1	
5	2KT7-001A	Band	2	
6	119WF5-003	Oil felt	1	
7	119WF5-001	Plate	1	
8	119WF5-002	Screw	1	
9	92WF5-010	Oil felt	1	
10	92WF5-011	Oil shield	1	
11	16WF1-059	Screw	1	
12	92WF5-012	Oil felt	1	
13		Oil wick	1	Φ2×250
14	92WF5-013	Oil shield	1	
15	36WF1-031D	Screw	1	
16		Oil wick	1	Φ2×250
17	92WF5-014	Oil felt assy.	1	
18	92WF5-014A	Felt	1	
19	92WF5-014B	Felt	1	
20	92WF5-014C	Oil wick	1	
21	92WF5-009	Felt	1	
22	2KT7-001A	Band	1	
23	1WF6-036	Clamp	1	
24	17WF1-020	Screw	1	
25	92WF5-006	Oil box assy.	1	
26		Oil wick	1	Φ2×380
27	92WF5-008	Oil felt	2	
28	92WF5-007	cover	1	
29	21WF3-026	Screw	2	
30	42WF2-008	Screw	2	
31	92WF5-004	Plate	1	
32	36WF4-017	Screw	1	
33	199WF6-020	Spring hook	1	
34		Oil tube	1	
35	248WF10-002	Oil felt	1	
36	248WF10-001	Oil box	1	
37	199WF1-048	Joint	1	
38		Oil wick	2	Φ2×160
39	13WF2-047	Screw	2	L=9.5

www.collierequipment.com

12. Thread tension components

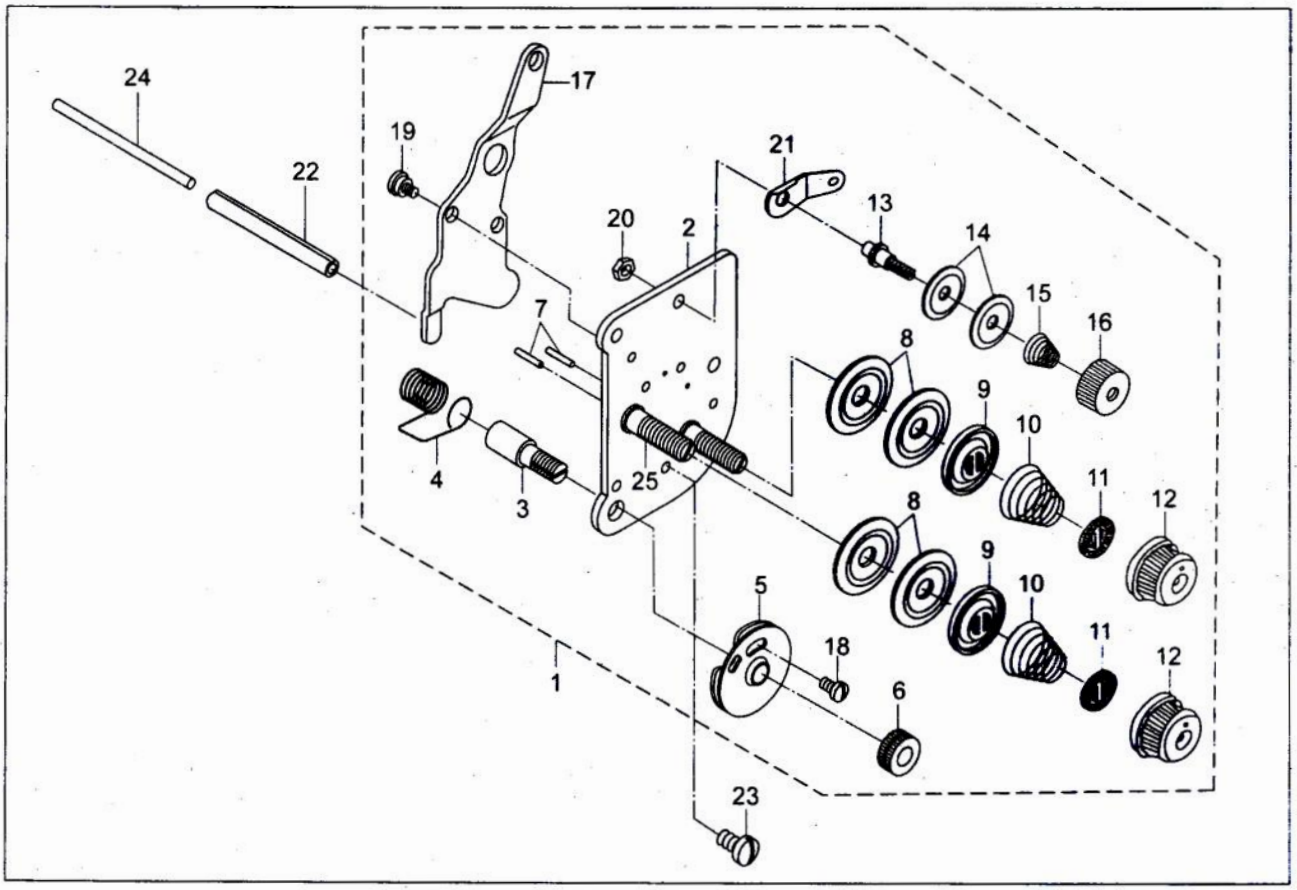

No.	Part Number	Name	Qt.	Remark
1	119WF2-005	Thread tension assy.	1	
2	119WF2-005A	Setting plate	1	
3	92WF2-018C	Thread take-up spring pin	1	
4	92WF2-018B	Thread take-up spring	1	
5	16WF2-046A8	Thread control plate	1	
6	16WF2-046A11	Thumb nut	1	
7	21WF4-024	Tension release pin	1	
8	22T1-012F5	Tension disc	2	
9	22T1-012F4	Tension release disc	2	
10	21WF4-031	Thread tension spring	1	
11	153209	Retainer	1	
12	21WF4-030	Nut	1	
13	92WF2-021A1	Bolt	1	
14	50WF2-035A4	Tension disc	2	
15	50WF2-035A3	Spring	1	
16	50WF2-035A5	Thumb nut	1	
17	119WF2-005B	Plate	1	
18	16WF2-046A9	Screw	1	
19	16WF2-046A15	Screw	2	
20	13WF2-052	Nut	1	
21	50WF2-035A2	Thread guide	1	
22		Pin	1	GB/T 879.1 6×50
23	1WF1-011	Screw	1	
24	92WF2-020	Tension release bar	1	
25	21WF4-020	Bolt	1	

www.collierequipment.com

13. Bobbin winder & tension components

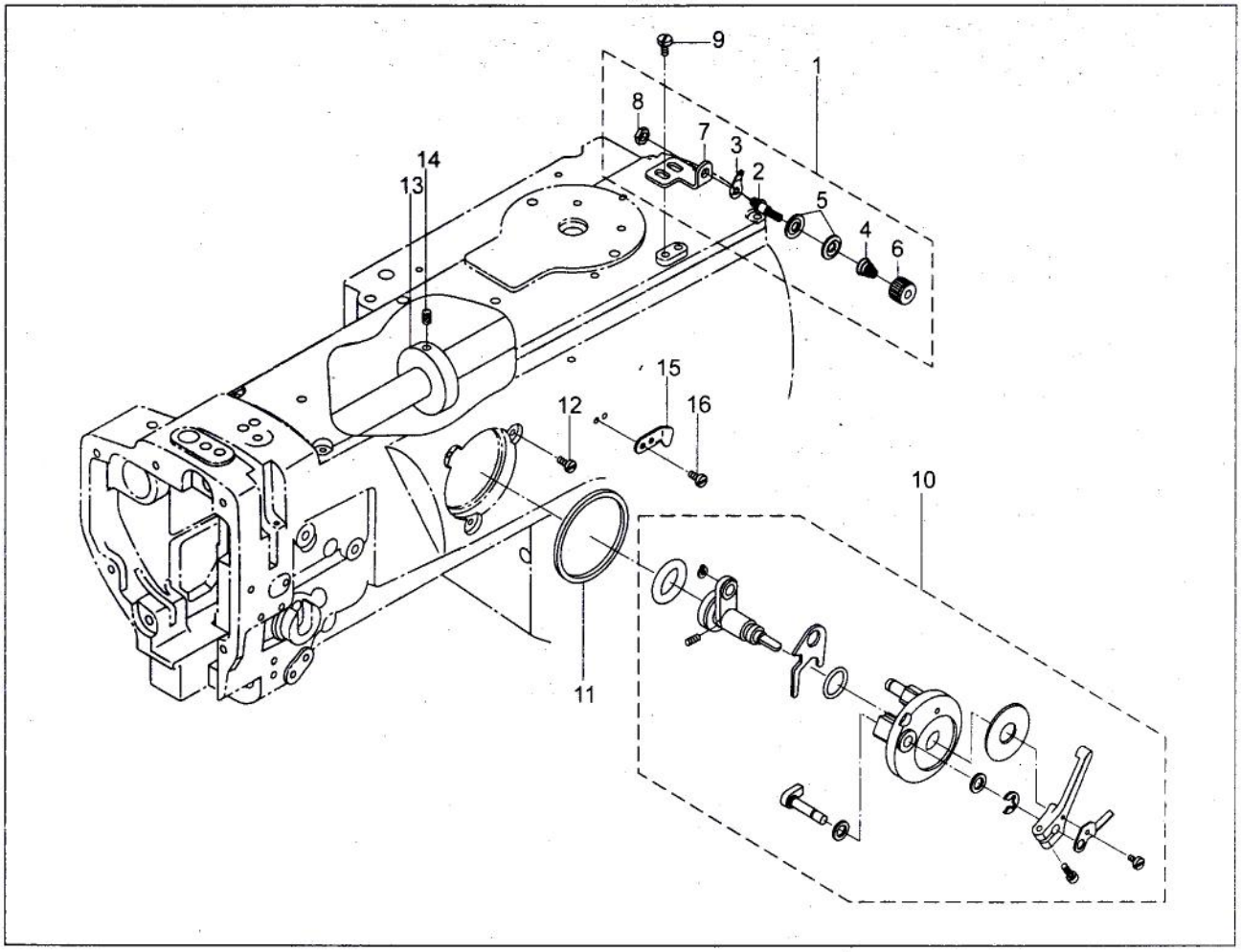

No.	Part Number	Name	Qt.	Remark
1	258WF1-007	Bobbin thread tension assy.	1	
2	92WF2-021A	Screw shaft	1	
3	50WF2-035A2	Thread guide	1	
4	50WF2-035A3	Spring	1	
5	50WF2-035A4	Tension disc	2	
6	50WF2-035A5	Thumb nut	1	
7	92WF2-021B	Setting plate	1	
8	2KT5-026	Nut	1	
9	13WF2-040	Screw	2	
10	92WF2-025	Thread winder assy.	1	
11	92WF2-026	Seal ring	1	
12	92WF2-027	Screw	3	
13	92WF2-035	Friction wheel	1	
14	6K2-043	Screw	2	
15	92WF2-036	Cutter	1	
16	36WF2-031	Screw	2	

www.collierequipment.com

14. Knee lifter components (GC2263/2263V)

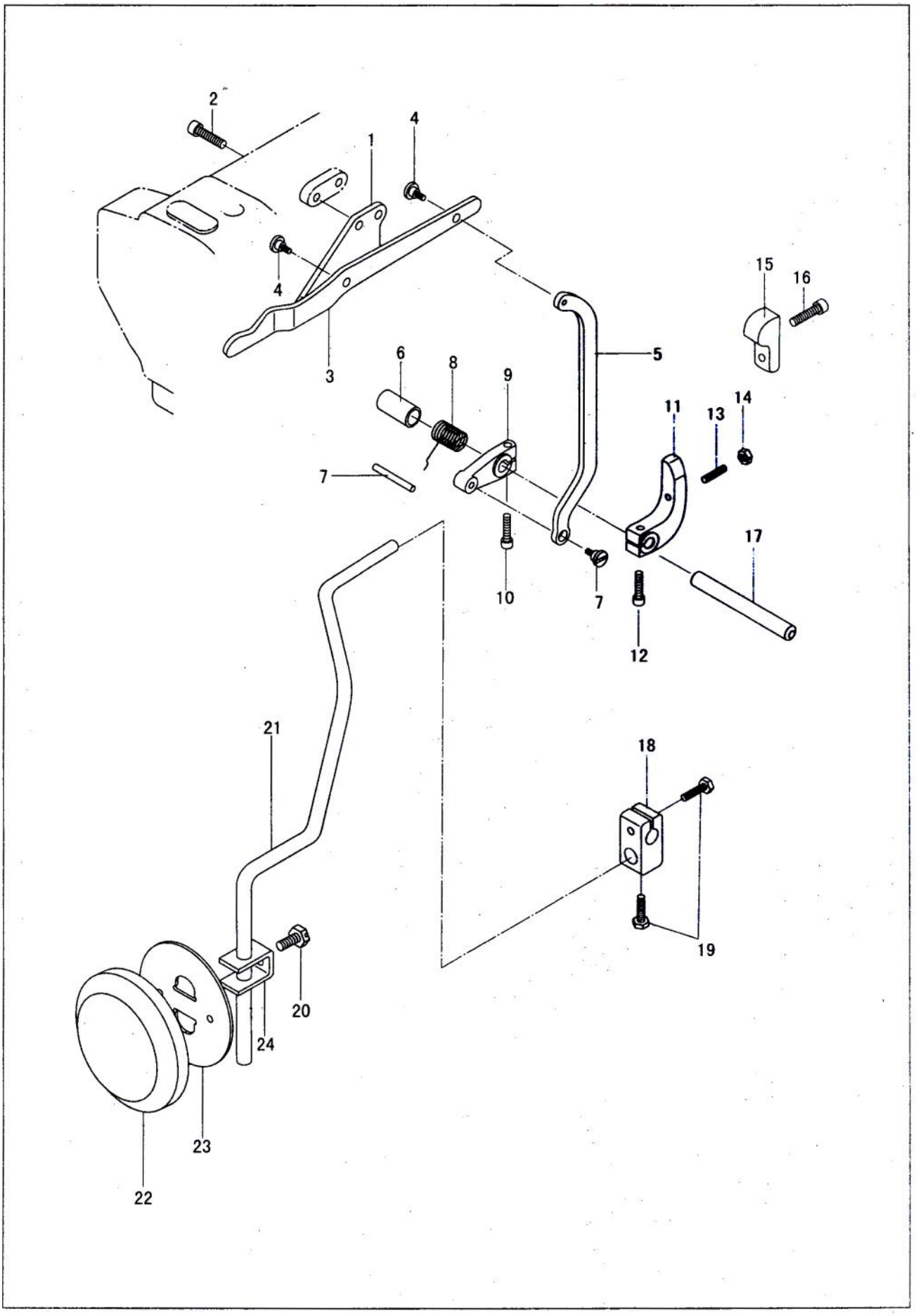

www.collierequipment.com

14. Knee lifter components (GC2263/2263V)

No.	Part Number	Name	Qt.	Remark
1	248WF9-002	Knee lifter lever bracket	1	
2	6K2-024	Screw	2	
3	248WF9-001	Knee lifter lever	1	
4	92WF4-014	Screw	1	
5	248WF9-003	Link	1	
6	248WF9-004	Bush	1	
7		Pin	1	GB/T879.1 4X20
8	248WF9-005	Spring	1	
9	92WF4-017	Crank	1	
10	80WF6-025	Screw	1	
11	248WF9-006	Crank	1	
12	80WF6-025	Screw	1	
13	199WF5-008	Screw	1	
14	72WF5-022	Nut	1	
15	248WF9-007	Positioning block	1	
16	22T5-006C3	Screw	2	
17	248WF9-008	Shaft	1	
18	22T9-003B3	Connector	1	
19		Screw	1	
20	22T9-003B7	Screw	2	
21	248WF9-009	Knee lifter bar	1	
22	22T9-003B8	Knee lifter pad	1	
23	22T9-003B5	Knee lifter plate	1	
24	22T9-003B6	Knee lifter bracket	1	

www.collierequipment.com

15. Accessories

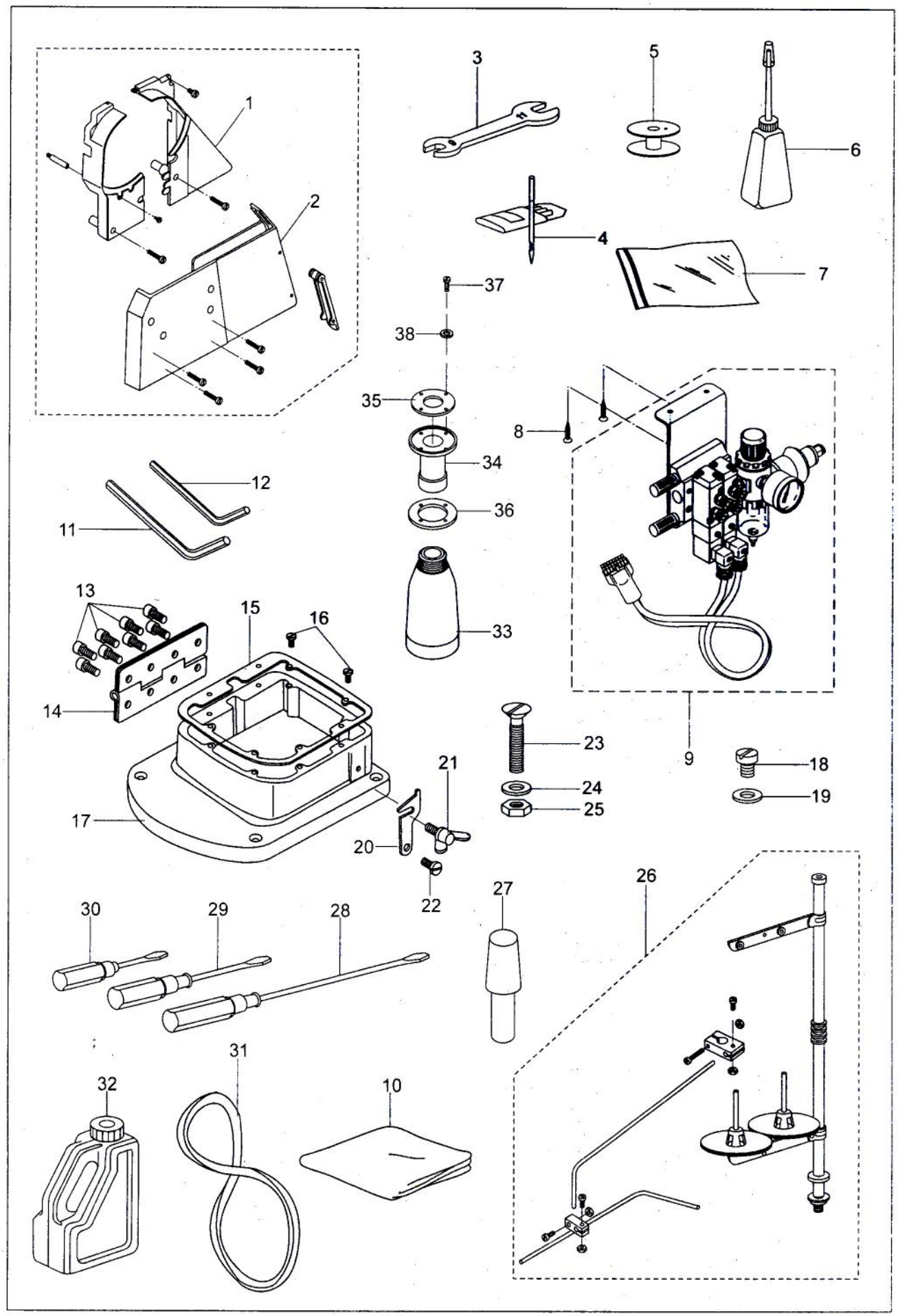

www.collierequipment.com

15. Accessories

No.	Part Number	Name	Qt.			Remark
			2263	2263V	-D2T3	
1	92WF6-013	Belt cover (U)	1	1	1	
2	248WF11-005	Belt cover (L)	1	1	1	
3	92WF6-028	Wrench(two head)	1	1	1	9X10
4		Needle	4	4	4	DPX17 23#
5	994539	Bobbin	/	/	1	
	33T1-027	Bobbin	1	1	/	
6	33TF-011	Small oil pot	1	1	1	
7	33TF-010	Accessories bag	1	1	1	170X200
8		Screw	/	/	2	GB100 3X16
9	93WF22-	Integrator assy.	/	/	1	
10	13F-002	Machine head cover	1	1	1	500X700
11		Wrench	1	1	1	S=3
12		Wrench	1	1	1	S=2.5
13		Screw	8	8	8	
14	248WF11-007	Hinge	1	1	1	
15	248WF11-009	Base seal	1	1	1	
16	13WF2-010	Screw	8	8	8	
17	248WF11-008	Base	1	1	1	
18	22T9-001A2	Screw	1	1	1	
19	22T9-001A3	Washer	1	1	1	
20	50WF2-010	Connecting hook	1	1	1	
21	50WF2-012	Swing-screw	1	1	1	
22	50WF2-011	Screw	1	1	1	
23	50WF5-010	Screw	4	4	4	
24		Washer	4	4	4	GB/T5287 6
25		Nut	4	4	4	GB/T41 M6
26	248WF11-010	Thread stand assy.	1	1	1	
27	14KT7-008	Supporting pole	1	1	1	
28	33TF-012	Screwdriver (B)	1	1	1	
29	33TF-013	Screwdriver (M)	1	1	1	
30	33TF-014	Screwdriver(S)	1	1	1	
31		V-belt	1	1	1	M55
32	1F-009	Big oil pot	1	1	1	
33	92WF6-027	Waste oil pot	1	1	1	
34	92WF6-018	Oil bolt	1	1	1	
35	92WF6-019	Seal	1	1	1	
36	92WF6-020	Spacer	1	1	1	
37		Screw	4	4	4	GB/T845 ST2.9X16
38	92WF6-023	Washer	4	4	4	GB848-85 M3

www.collierequipment.com

16. Binding parts (GC2263V)

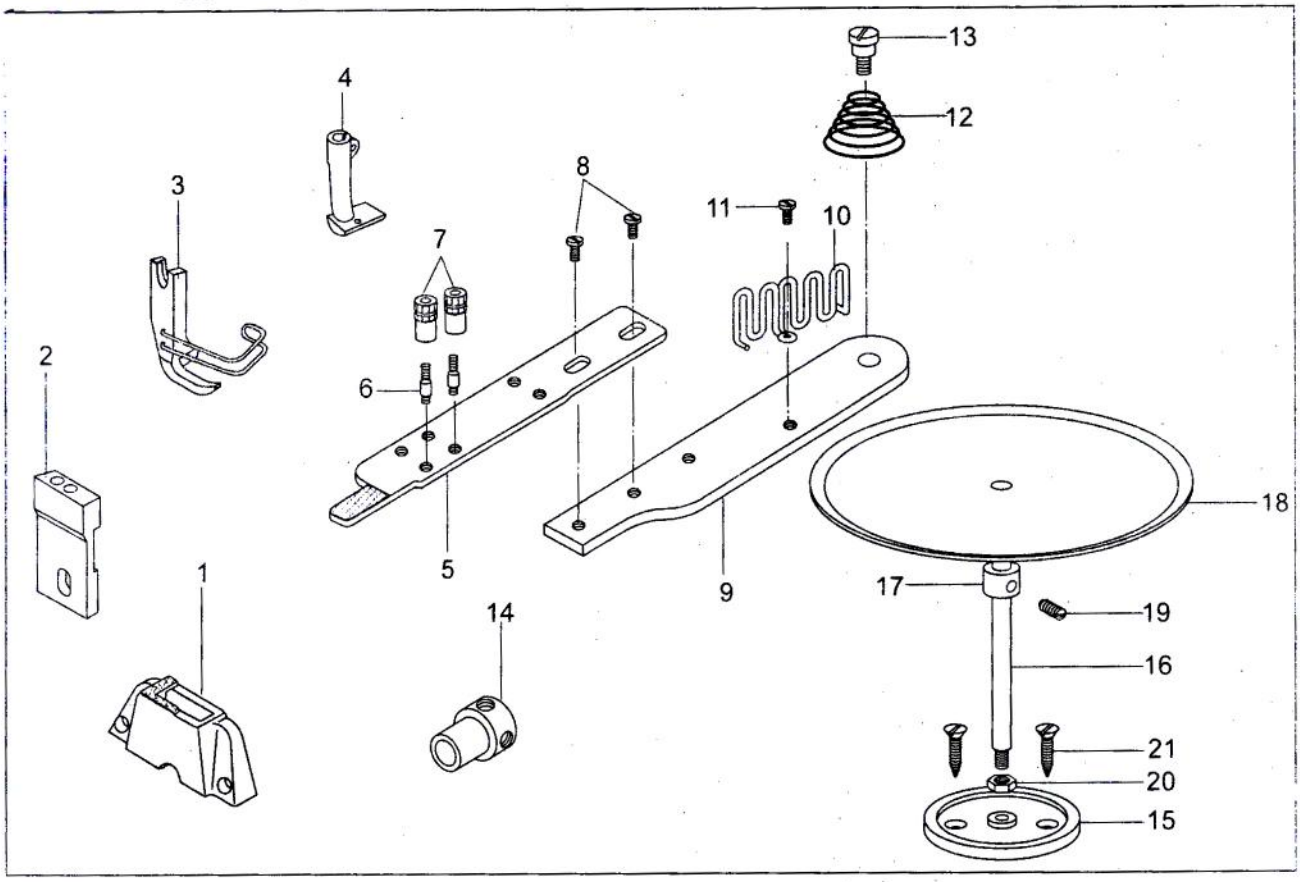

No.	Part Number	Name	Qt.	Remark
1	249WF6-001	Needle plate	1	
2	249WF6-002	Feed dog	1	
3	249WF6-003	Presser foot	1	
4	249WF6-004	Walking foot	1	
5	249WF6-005	Binder support plate	1	
6	249WF6-008	Screw	2	
7	28WF2-008	Nut	2	
8	16WF4-030A	Screw	2	
9	249WF6-006	Linking plate	1	
10	49WF2-032	Tape guider	1	
11	33T3-006	Screw	3	
12	249WF6-010	Spring	1	
13	249WF6-009	Screw	1	
14	249WF6-007	Cam	1	
15		Tape tray base assy.	1	
16		Bar	1	
17		Collar	1	
18		Tape tray assy.	1	
19		Screw	1	
20		Nut	1	
21		Screw	2	

www.collierequipment.com

Collier Equipment

100 Mill Creek Circle / PO Box 175

Lexington, AL 35648

Ph: (256) 229-6595 - Fx: (256) 229-6779

www.collierequipment.com